INSTALLATION INSTRUCTIONS FOR ASSEMBLED SYSTEMS

the digital group inc
po box 6528 denver, colorado 80206 (303) 777-7133

298-035-A-4

INTRODUCTION

HOW TO GET STARTED

1. Unpack the entire kit by disassembling the entire cabinet as shipped including the top, bottom, and both side rails.

2. Check parts against parts list and figure 1.

3. Appendix B contains exploded assembly drawings, set up for easy referral.

4. Read through all the instructions first.

5. Get all necessary tools together.:

   A. scissors
   B. knife
   C. needle-nose pliers
   D. wire-stripper
   E. open-ended wrench set
   F. flat-blade screwdrivers
   G. large pliers-slipjoint or similar
   H. soldering gun, iron (35 watts or so), and resin core solder
   I. Ball point screwdriver or allen wrench

The Digital Group cabinet will enclose and protect system cards such as the CPU, memory, and I/O. In addition, the cabinet encloses support items such as power supplies, external I/O connections, fan and card guides. The cabinet uses a rugged aluminum construction and yet provides easy access to the internal circuitry. Top and bottom covers slide off to provide this access. Attention was given to making the cabinet RF tight. The rear openings may be screened and shielded. 4-40 threaded holes are included on the front and back panels to allow attaching of wiper fingers. Complete suppression of RF can be achieved using these options.

Some suggestions are in order before assembling the cabinet. Reading over the entire document before proceeding with the first step will eliminate a great deal of confusion and missed steps during construction. It is strongly suggested that all the circuit cards including the motherboard and the power supply be completely assembled and tested before installing in the cabinet. This could be done in a friend's system.

Insulate any wires or lugs that you feel might cause a short. Remember that aluminum can be bent so don't use excessive force while assembling the parts. If at all possible, take a look at an assembled cabinet someone else has (such as a dealer or a friend).

Mark the box at the beginning of each step to indicate when completed.

FOR PRE-ASSEMBLED CABINETS

PLEASE REFER TO STEP 69 TO REMOVE THE COVER.

the digital group inc
po box 6528 denver, colorado 80206 (303) 777-7133

CPU CABINET PARTS LIST

HARDWARE BAG

2 110 Volt wall outlets
1 Power cord
1 22 pin connector
1 Power cord strain relief
1 UHF connector
2 Mini phone jacks
1 Red power switch
1 Blue reset switch
4 Rubber feet
10 Plastic card guides (snap-in type)
1 Allen screwdriver

LARGE HARDWARE

1 Front panel
1 Rear panel
1 Front dress panel
2 Side rails
1 Top cover
1 Bottom cover
1 Wiring harness
2 Front card guide supports
2 Rear card guide supports
1 Fan
1 Backplane

FAN KIT

4 6-32 x 1'' screws
3 6-32 nuts
1 Mounting clip
4 Rubber grommets
1 Fan switch
1 Finger guard

SMALL PARTS BAG

10 4-40 x 1/2'' screws
7 6-32 x 3/8'' screws
20 8-32 x 1/4'' screws
13 8-32 x 3/8''screws
6 8-32 x 3/8'' hexhead screws
10 4-40 Hex nuts
10 4-40 Lock washers
1 6-32 Hex nut
19 8-32 Hex nuts
8 Fiber washers
3 14 ga. 8-32 crimp lugs
4 8-32 x 1/2''screws
2 Solder lugs

POWER PLATE KIT

1 Power supply mounting plate
1 Fuse holder
1 Fuse**

** 2.5 Amp for 6 amp power supply
4.0 Amp for 12 amp power supply
5.0 Amp for 18 amp power supply

the digital group inc
po box 6528 denver, colorado 80206 (303) 777-7133

CPU CABINET ASSEMBLY

1. REAR PANEL

The rear panel is shown as Item 18 in Figure 1. In this series of steps we will install some of the components that mount on the rear panel. Study Figure 3 and 4.

2. □ Refer to Figure 6. Locate the backplane circuit board. Insert the 22 pin connector(s) that will be soldered on the backplane. (Normally, one connector is supplied with the cabinet kit; options will add more connectors.) Insert the connector(s) from non-trace side of backplane. (DO NOT SOLDER THE CONNECTOR(S) YET!) Lay the backplane with the installed connector(s) into the group of six slots. Wiggle the connectors to get them to fit in the slots. Make sure you push them all the way in. Refer to Figure 7. Solder the connector(s) in. It should only be necessary to solder three pairs of pins on each side of the connector. Every time in the future that you add another connector to the backplane, be sure to do it in the same manner. (This procedure guarantees all connectors will line up in the slots.) Remove backplane for later installation.

3. □ Refer to Figures 3 and 4. Install the mini phone jacks (Item 2, Figure 1). Figures 3 and 4 show placement of the jacks. Tighten down securely but avoid over tightening. The flat washers should be on the outside.

4. □ Refer to Figure 4. Install the UHF connector (Item 3, Figure 1). The UHF connector mounts through hole and extends to the outside. Use (3) 4-40 x 1/2'' screws. washers, and hex nuts. The fourth screw is installed later.

5. □ Install the power cord making sure the strain relief (Figure 1, Items 4 and 5) allows the 9'' of power cord inside the cabinet. Strip the power cord of 9'' of outer insulation. The black wire should be 9'' long. Cut the white wire to 8'' long and the green wire to 2'' long. Refer to Figure 8. To install the strain relief, place cord in the channel provided on larger part of the strain relief. Place the smaller top of the strain relief over cord and crimp bottom and top together with set of pliers. Push the clamped-together strain relief into the hole provided from the outside. Some force may be necessary.

6. □ Refer to Figure 3. Install the fuse holder with the rear solder lug in an up position. The fuse holder is packaged with the power supply plate (Figure 1, Items 14 or 33). The tape holding the fuse holder can be saved for use in a later step.

7. □ Install the push on/off fan switch with the solder lugs in an up position. (See Figure 1, Item 8.) Mount lock washer on the inside of rear panel and flat washer on the outside of the rear panel (Figure 3.)

8. DO NOT INSTALL THE FAN AT THIS TIME!

9. □ **SIDE RAILS AND REAR CARD GUIDE SUPPORT**

(Figure 1, Item 9.) Before proceeding, study Figures 1, 3, and 4 and note that the side rails (Item 9) are the heavy brown, anodized aluminum pieces. The card guide supports (Items 10 & 23) are the long, aluminum pieces with all the holes in them. They are sometimes referred to as "card rails".

10. □ Refer to Figure 5. Note that the side rails are not symmetrical. The end with the slots closest to the edge should attach to the front of the cabinet. Also note that the two rear card guide supports have longer mounting brackets than the front guide supports. All of the card guide supports should be mounted at appropriate step so that the long rows of evenly spaced holes are on top. (Figure 1, Item 10.)

11. □ Refer to Figure 9. Assemble the rear panel, side rails, and the one lower card guide support with (4) 8-32 x 3/8'' hex cap screws. Each screw passes through the card guide support mounting hole, the rear panel bracket, and into a threaded hole in the side rail. DO NOT tighten the screws at this time. They are left loose to allow for later adjustment.

12. DO NOT INSTALL THE REMAINING REAR CARD GUIDE SUPPORT AT THIS TIME!

13. □ **FRONT PANEL, FRONT LOWER CARD GUIDE SUPPORT**

Refer to Figure 10. Attach the front panel to the two side rails using (2) 8-32 x 3/8'' round head machine screws These (2)

the digital group inc
po box 6528 denver, colorado 80206 (303) 777-7133

screws pass through the two front panel mounting bracket holes that are furthest from the front panel and into the threaded holes of the side rails. These (2) screws do not connect the front card guide support, and should be left loose to allow for hole alignment in the next step.

14. □ Again, refer to Figure 10. Install the lower front card guide support using (2) 8-32 x 3/8″ hex cap screws. Again, note that the long row of evenly spaced holes goes on top. These (2) screws pass through the card guide support, the front panel mounting bracket, and into the side rail threaded holes. Push the card guide supports as far down as the oblong mounting holes permit and do not tighten the mounting screws at this time.

(NOTE: Switches shown in Figure 10 are installed later.)

15. POWER PLATE, MOTHERBOARD, UPPER FRONT GUIDE SUPPORT

Refer to Figure 11. Install the power plate to the front and rear internal mounting brackets using (4) 8-32 x ½″ machine screws, and (4) locking nuts. Position the power plate at the right-hand (fan) end of the cabinet with the large power plate cutout facing the inside of the cabinet. Make sure that the power and reset switches have an access hole cutout directly below their terminals. If this is not the case, then flip the power plate end over end. Do not tighten the screws at this time.

16. □ (NOTE: On some motherboards it will be necessary to re-drill the mounting holes to 3/16″ diameter.)
Refer to Figure 12. Select one of the three locations provided for the motherboard, making sure the 36 pin memory slots face away from the fan end of the cabinet. (Holes should line up.) Install the motherboard using (8) 8-32 x ¼″ machine screws and (8) fiber washers. No hex nuts are required. The fiber washers are necessary to avoid shorting the −12 Volt supply line to chassis. This method allows maximum flexibility in motherboard placement. Do not tighten the screws at this time.

17. □ Some explanation of the card guide support system is in order here. Once again, note that the row of evenly spaced holes will be along the top of the support when it has been correctly installed. The lower row of unevenly spaced holes is designed to correspond to The Digital Group's motherboard numbers 2002-A and 2002-B in any of the three positions. The top row of holes is intended to accommodate those of you who may have created something of your own.

18. □ Refer to Figure 13. Hold the remaining front card guide support in position and determine which holes the plastic card guides must be installed in to accommodate the position of the motherboard. Mark these holes.

19. □ Refer to Figure 14. Snap the plastic card guides into the holes you have just marked, making sure that the end of the card guide with a small "v" cut into the channel is in the upright position.

20. □ Using marked card guide support as a guide, snap plastic card guides into the uninstalled UPPER REAR card guide support so that the two sets of guide supports are face-to-face as you do this, since they are mirror images of one another.

21. □ Fasten the upper front card guide support to the two mounting brackets using (2) 8-32 x 3/8″ hex head cap screws and locking hex nuts (Figure 15). Do not tighten the screws at this time.

22. □ Align the plastic card guides with the holes on the bottom card guide support and snap the card guides into place. Do not install upper rear card guide support at this time.

23. POWER SUPPLIES

In this series of steps, we will install a POWER Ø board and either a 6 Amp, 12 Amp, or 18 Amp, 5 Volt supply. (If you plan to ship an assembled system, the power supplies must be anchored more securely than they are in normal operation. Packing foam or equivalent is recommended.)

24. □ Refer to Figure 16. Install 6 Amp, 12 Amp, or 18 Amp +5 power supply, whichever the case may be, by installing (4) 8-32 x 3/8″ screws through the bottom of the power plate first, then through the power supply itself. It is necessary to do this since there is no screwdriver access from the top; however, the hex nuts may be held with a pair of pliers and there is ample access from the bottom. (Figure 16.) The 5 Volt supply should be installed with the open end toward the center of the

the digital group
po box 6528 denver, colorado 80206 (303) 777-7133

cabinet. For the 6 and 12 Amp supplies, this places the transformer toward the rear of the cabinet and for the 18 Amp, the transformer is toward the front of the cabinet. (Figure 16 for 12 Amp; also look at Appendix A.)

25. □ Refer to Figure 17. Solder a solder lug to the ground trace on the POWER Ø. The small end of the lug should be positioned on the ground trace in a position almost directly across from the −5 marking on the POWER Ø board. Insert the end of your needle-nose pliers through the large end of the lug, then into the board mounting hole nearest the lug location. This centers the lug over the hole so the screw is not obstructed when mounting the board.

26. □ Refer to Figure 18. The POWER Ø installs over the large cutout on the edge of the power plate with (4) 8-32 x ¼″ screws, hex nuts are not necessary. The transformer should be toward the rear of the cabinet.

27. WIRING HARNESS

AT NO TIME SHOULD THE SYSTEM BE HOOKED TO POWER UNTIL THE MANUAL ADVISES IT. These steps, if not followed, could damage the system. Turn the chassis upside down. Refer to Figures 19 and 20. Lay out the wiring harness so that all of the leads are running to their approximate destinations. Make sure the bundle of wires that connect to the power supplies is fed through the power plate cutout that is between the two power supplies.

28. □ The first items to be attached to the wiring harness are the two power outlets. (Figure 1, Item 25.) While attaching the wires to outlets make sure outlets (which have not been mounted to the back panel) are oriented so they can be installed with green grounding screw and grounding holes facing downward. (See Figure 42.) Discard the two long screws that may be attached to each of the power outlets. The outlet farthest from the fan will be the unswitched outlet and the one nearest the fan will be switched. Neither outlet will be fused.

The wires in the harness will breakout and line up in approximate order in which they are to be attached. Starting with the unswitched outlet, attach the SINGLE WHITE wire to one of the screw terminals located farthest from the fan hole. Connect the BLACK wire from the power cord to the remaining screw terminal on this side. Use a crimp-on lug provided to connect BLACK wire of power cord to outlet. (If you don't have a crimping tool, use a pair of sturdy needle-nose pliers or equivalent to crimp-on lug to black wire (Figure 21). TUG ON WIRE TO MAKE SURE IT IS HELD SECURELY BY CRIMP-ON LUG.

29. □ On the other side of unswitched outlet connect the longest GRAY WIRE PAIR that terminates in a crimp-on lug. Also, attach the WHITE lead from the power cord to same side of outlet using a crimp-on lug provided (Figure 21) using same crimp-on technique as in Step 28.

30. □ Moving to the outlet nearest the fan (Figure 21), mount the WHITE WIRE PAIR to one of the two terminals located away from the fan hole. This is the switched outlet.

31. □ On the side of the switched outlet nearest the fan hole, connect the GRAY WIRE PAIR to a terminal. Connect the remaining SINGLE BLACK WIRE to this side (Figure 21).

32. □ MAKE SURE **ALL** OUTLET CONNECTIONS ARE **TIGHT.** Use washers if necessary. DON'T STRIP THE SCREWS OUT. Install both outlets using (2) 6-32 x 3/8″ screws for centers and (4) 8-32 x ¼″ screws with (4) hex nuts. Looking at Figure 21, make sure the outlets are installed with the grounding hole below the two power slots on the outlet. Attach the third crimp-on lug to green ground lead. CONNECT THE GREEN GROUND LEAD FROM THE POWER CORD TO THE THREADED HOLE JUST BELOW THE FUSE HOLDER OR TO ONE OF THE BOLTS ON THE UHF CONNECTOR. Use a single 8-32 x 3/8″ screw, and hex nut (nut goes on inside of panel). (See Figure 21 and 3.)

33. □ The wiring harness has been designed to accommodate various power supply options. Thus, some compromises have been made on lead lengths. If you are installing an 18 Amp supply, you may trim the wires to fit as closely as you like. However, if you have a lower current supply, DO NOT cut any of the leads unless you are absolutely certain you will never upgrade to a larger supply. The 12 Amp supply may have either bolt-on or solder-on type terminals (for the DC outputs) depending on the manufacturer. If your supply has the bolt-on type of terminal, or if you

the digital group
po box 6528 denver, colorado 80206 (303) 777-7133

are installing an 18 Amp supply, use the crimp-on terminals supplied and terminate the two red wires together and the two black wires together. Use the same crimp-on technique as described in Step 28. See Appendix A. Two crimp-on's may come attached to your power supply.

34. □ Refer to Figure 22. There are two sets of gray-white pairs that lead to the power supply area. The shorter set goes to the transformer of the 5 Volt supply (whether it be 6, 12, or 18 Amp). Solder the gray wire to the tab closest to the back of the cabinet and the white lead to the tab nearest the front. FOR EXACT DETAILS ON WHICH TABS TO USE, REFER TO POWER SUPPLY INFORMATION IN APPENDIX A OF THIS ASSEMBLY MANUAL AND INFORMATION INCLUDED WITH POWER SUPPLY.

35. □ Refer to Figure 22. Solder the longer gray-white pair to the two terminals of the POWER Ø. Gray wire goes to tab nearest back of cabinet, white to tab nearest front.

36. □ Connect the two red wires to the + terminal on the +5V supply. SEE THE POWER SUPPLY INFORMATION FOR EXACT DETAILS. APPENDIX A, AND FIGURE 23.

37. □ Connect the two black wires to the − terminal on the +5V supply. See Appendix A and Figure 23.

38. □ Refer to Figure 24. Push the molex connector onto the POWER Ø pins. The red wire end of the molex connector goes toward the center of the cabinet.

39. □ Refer to Figure 25. Connect the two gray shielded audio cables to the two audio jacks on the rear panel. Make sure that the shields are connected to the ground terminal on each jack. Solder the shield very carefully to avoid melting inner insulation and shorting the cable.

40. □ Refer to Figure 25. Connect the black shielded video cable to the video jack on the rear panel. The inner conductor is soldered into the center post, and the shield lug is fastened via a fourth 4-40 x ½″ screw left out previously.

41. □ Refer to Figure 26. Fasten the ring lug with three wires in it to the rear terminal of the fuse holder. Use (1) 6-32 x 3/8″ screw and hex nut. TIGHTEN SECURELY.

42. □ Refer to Figures 21 & 26. Solder the free end of the SHORT WHITE wire running from the fuse holder lug to the fan switch terminal farthest from the rear panel.

43. □ Solder the longer remaining WHITE wire to the unused fuse holder lug.

44. □ Solder the remaining BLACK wire to the center terminal of the fan switch.

NOTE: There is a loop in the wiring harness where it connects to the motherboard. This allows flexibility in motherboard placement, for different configurations.

45. □ Refer to Figures 27 & 28. Fasten the ring lug with the two black wires to the point marked "gnd" on the motherboard, using (1) 4-40 x ½″ and hex nut. Be sure to bend the lug so that there is no possibility of shorting to the +5V trace.

46. □ Refer to Figure 28. Fasten the ring lug with the two red wires to the point marked "+5V" on the motherboard, using (1) 4-40 x ½″ screw and hex nut.

47. □ Solder the center conductor of the black video cable to the point marked "V" on the motherboard.

NOTE: The shield is not grounded on the motherboard end of either the video or audio cables to avoid ground loop problems. Prevent any shield wires from coming into contact with the +5V trace on the motherboard by using shrink tubing or spaghetti.

48. □ Either visually or by using an ohmmeter, trace the audio cable that runs from the audio jack nearest the UHF video jack. Solder this cable center conductor to the point marked "in" on the motherboard.

49. □ Solder the center conductor of the other gray audio cable to the point marked "out" on the motherboard.

50. □ Solder the orange wire to the point marked "−5" on the motherboard.

the digital group
po box 6528 denver, colorado 80206 (303) 777-7133

51. □ Solder the (2) blue wires to the point marked "+12" on the motherboard.

52. □ Solder a small loop of bare wire (use a resistor lead or equivalent) to the two small holes on the motherboard shown just above the "+12" point.

53. □ Solder the (2) yellow wires to the loop just installed and trim carefully to avoid shorting to the chassis.

54. □ Refer to Figure 29. Push the molex connector containing the purple wire onto pin 47 of CPU wirewrap connector. Pin 47 is located on the row of CPU wirewrap pins nearest the memory slots. It is the fourth pin from the end opposite the power supply connections on the motherboard. This is the reset pin mentioned in Digital Group CPU documentation.

Refer to Figure 30. The four wires shown in Figure 30 are for connection to the I/O backplane board. The backplane is the board you prepared in Step 1. Refer to Figure 31. Solder the four wires in. Install with (4) 4-40 x ½'' screws and hex nuts to back panel. Backplane installs to inside of back panel.

55. □ Take the front dress panel and lay it over front panel, lining up switch holes (Figure 32). The Digital Group logo should face outward. Install the blue reset switch in the mounting hole closest to the end of the front panel. The switch should snap in. Install the red switch in the remaining hole.

NOTE: To protect dress panel, you might wish to tape newspaper over it and the switches for the rest of the assembly steps. Alternatively you can leave front dress panel off until system is completely operational, then remove the switches, add the dress panel, and reinstall switches.

56. □ Connect the +5V and the black ground leads to the front panel switches as shown. Connect the (2) white power switch wires and the (1) purple reset switch wire to the front panel switches as shown (Figure 33).

57. □ This completes the wire harness installation. Install fuse appropriate to your power supply. Check wiring over very carefully. Make sure all connections are snug. Carefully plug system in and if the fuse doesn't blow, proceed to check DC voltages. If fuse blows, inspect wiring till problem is found. Don't jumper past fuse holder. BEFORE installing any boards, make absolutely certain that the proper voltages are getting to the motherboard and correct any discrepancy.

58. UPPER REAR CARD GUIDE SUPPORT

Refer to Figure 34. Fasten the upper rear card guide support (with the plastic guides installed) to the brackets provided on the rear panel. Use (4) 8-32 x 3/8'' screws and locking hex nuts. Do not tighten the screws at this time. Snap the plastic guides into the lower rear card guide support.

59. □ Install enough PC boards in the motherboard to set the distance between the card guides. The PC boards should be snug enough so that they do not rattle around.

60. □ Tighten loose screws in the following order:

A. Each end of the front and rear upper card guide supports.
B. Right end (fan end) of the front and rear lower card guide supports.
C. Power supply plate.
D. Motherboard (as far as is accessible with cards in).
E. Left-hand end of rear lower rail.
F. Remove any cards and plastic card guides necessary to allow access to the left-hand end of the lower front card rail and tighten both screws.
G. Now, tighten any other screws that are still loose.
H. Remove all cards.

61. LOWER COVER

Refer to Figure 35. Install the (4) rubber feet on the lower cover using (4) 8-32 x ¼'' screws. The screws may not appear to be long enough, however, they work fine. A longer screw would protrude into the cabinet and interfere with the slide action of the lower cover.

62. □ Turn the assembled chassis upside down so that the wirewrap pins under the motherboard are showing.

63. □ Refer to Figure 36. Stand facing the front of the now upside down cabinet. Grasp the sides of the lower cover with the inside (un-

the digital group inc
po box 6528 denver, colorado 80206 (303) 777-7133

painted) down toward the cabinet. The lipped edge or front of the lower cover should be facing you. Now, lower the cover until it rests on the side rails. Some wiggling and adjusting may be necessary to get the cover to drop past the interior mounting brackets.

64. □ Refer to Figure 37. When the cover contacts the side rails on each side, slide it first forward then backward until the SLIDES attached to the inside of the cover drop into the slots in the side rail.

65. □ Refer to Figure 38. Now, place your palm on the rear of the cover with your fingers around the rear panel and pull the cover into place. In some cases, inward pressure with palms and elbows on the side of the cover is necessary to get slides to engage on the inner track. Some light lubricant is recommended.

66. □ Refer to Figure 39. Lock the cover in place with (2) 6-32 x 3/8″ screws through the rear panel and into the slides.

67. □ Some vertical adjustment is possible on the side rail mountings. This is so that you may adjust the rails for the smoothest cover installation and removal. Trial and error will prove the most effective method in making the adjustments.

68. UPPER COVER

Turn the cabinet right side up. Install the upper cover much the way you did the lower cover starting with Step 63.

69. □ To remove a cover, first remove the two locking screws and insert finger tips between front dress panel and cover lip with thumbs on top of the cabinet about 3″ in from each side. This starts the cover moving. Then pull until the slides reach the slots in the side rail. Now, pull up and off.

70. □ After installing the upper cover and deciding that the side rail vertical adjustment is where you want it (the fan hole allows some access to tighten screws while cover is in place) remove the upper and lower covers and proceed to install the fan.

71. FAN AND FAN GUARD

Refer to Figure 40. Install the (4) fan mounting grommets in the four holes surrounding the large fan cutout on the rear panel.

72. □Locate the power connection and the arrow indicating direction of air flow on the fan body. Refer to Figure 40. Install the small metal spring clip on the fan's front mounting flange next to the power connection. (The front being the side of the fan that will blow air out of the cabinet.)

The spring clip acts as a nut for the screw used to mount the fan, as the power connection does not allow room for a hex nut.

73. □ Refer to Figure 40. Position the fan so that the air flow will be OUT of the cabinet, with the power connection being nearest the UHF connector on the rear panel.

74. □ Refer to Figure 41. Install the fan power cord by pushing it onto the terminals on the fan body.

75. □ Refer to Figure 42. Install the fan and the fan guard using (4) 6-32 x 1″ screws and three hex nuts. The screws pass through the fan guard, rubber grommet, and fan mounting flange. Be careful to only tighten these screws until they are snug. Over-tightening will only crush the grommets and ruin their anti-vibration properties.

76. □ Before installing any boards in your new cabinet, please check once again that all the proper voltages are getting to the motherboard. Any problem could cost you several rather expensive IC's. Make this check carefully. Then install all boards in proper places.

77. □ Reinstall the upper and lower covers.

Thank you for buying a Digital Group system. We hope these instructions have been clear. If you encounter any difficulties, please feel free to give us a call.

THE DIGITAL GROUP

the digital group
po box 6528 denver, colorado 80206 (303) 777-7133

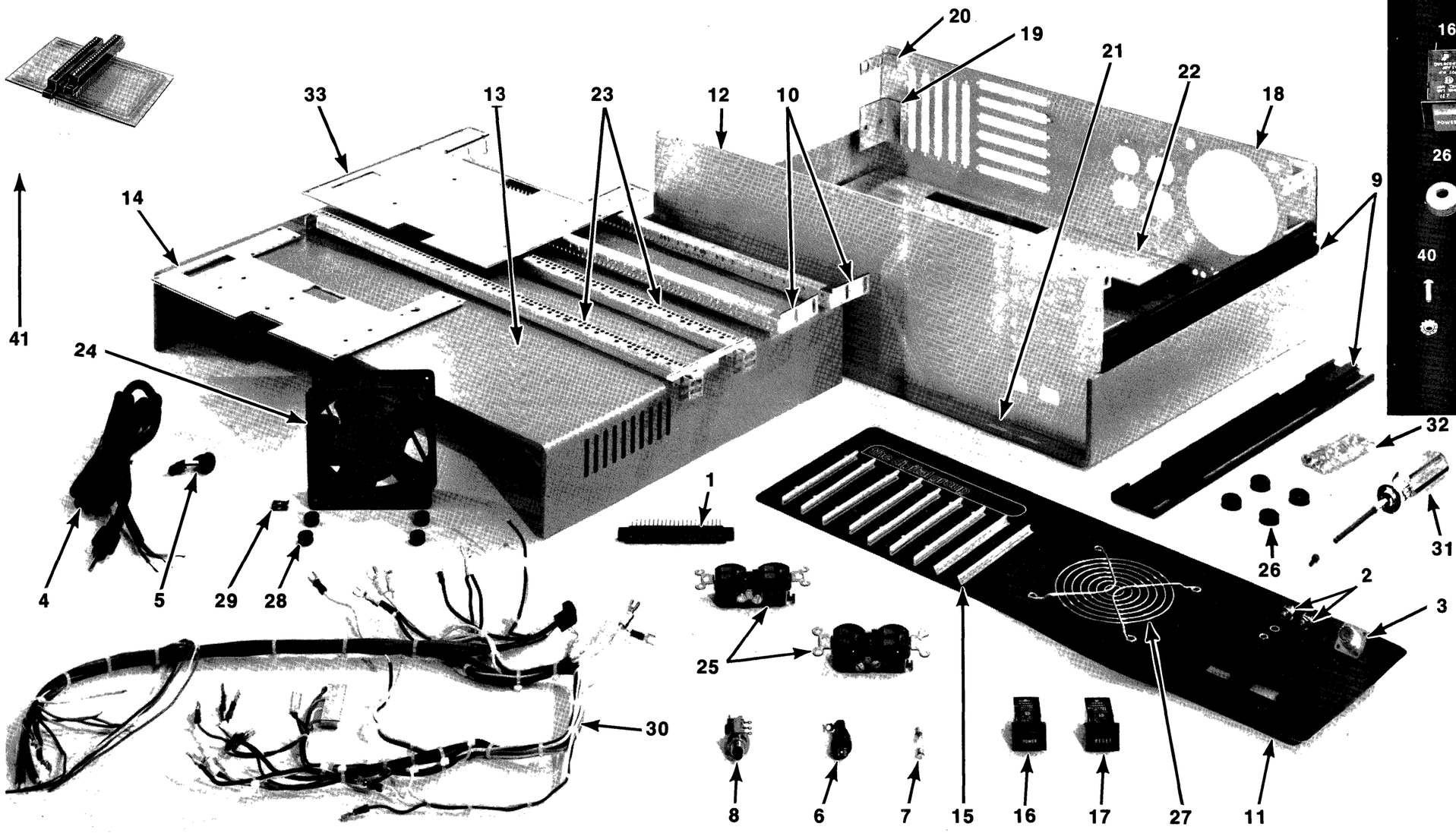

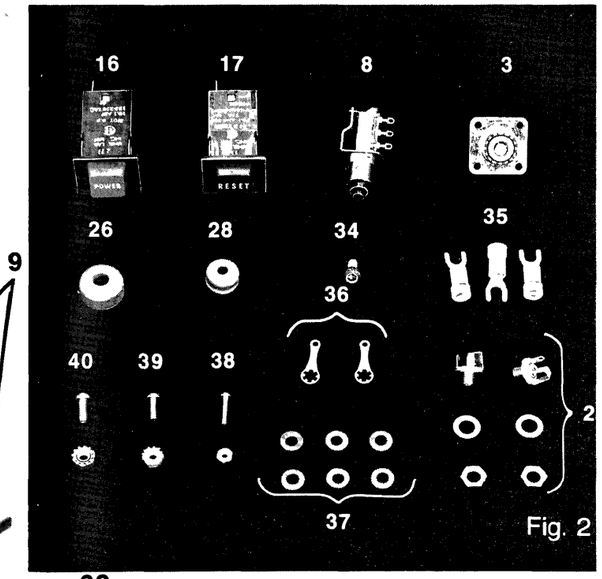

Fig. 2

1. 22 Pin Connector
2. Audio Jacks
3. UHF Connector
4. Power Cord
5. Power Cord Strain Relief
6. Fuse Holder
7. Fuse
8. Fan Switch
9. Side Rails
10. Rear Card Guide Supports
11. Front Dress Plate
12. Front Panel
13. Upper Cover
14. 12 Amp Power Plate
15. Plastic Card Guides
16. Red "Power" Switch
17. Blue "Reset" Switch
18. Rear Panel
19. Rear Side Rail Mounting Bracket (front not shown)
20. Rear Card Rail Mounting Bracket (front is smaller, also not shown)
21. Lower Cover
22. Rear Interior Mounting Bracket (front is smaller, also not shown)
23. Front Card Guide Supports (showing plastic guide installed)
24. Fan
25. Standard Wall Outlet
26. Rubber Furniture Guards
27. Fan Finger Guard
28. Fan Mounting Grommets
29. Fan Mounting Clip
30. Wiring Harness
31. Ball Point Screwdriver
32. Small Parts Bag (hardware)
33. 18 Amp Power Plate
34. Hex Head Screw
35. Crimp-on Lugs
36. Solder Lugs
37. Fiber Insulators
38. 4-40 Screw
39. 6-32 Screw
40. 8-32 Screw
41. Backplane

Fig. 1

CPUCAB-R0

the digital group
po box 6528 denver, colorado 80206 (303) 777-7133

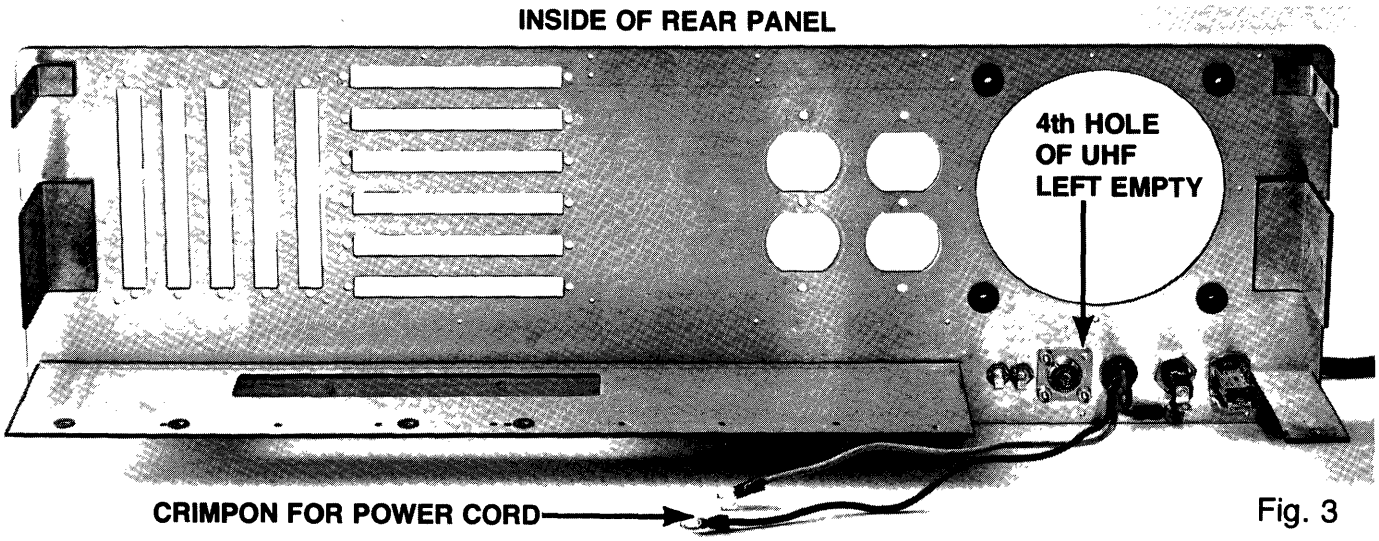

Fig. 3

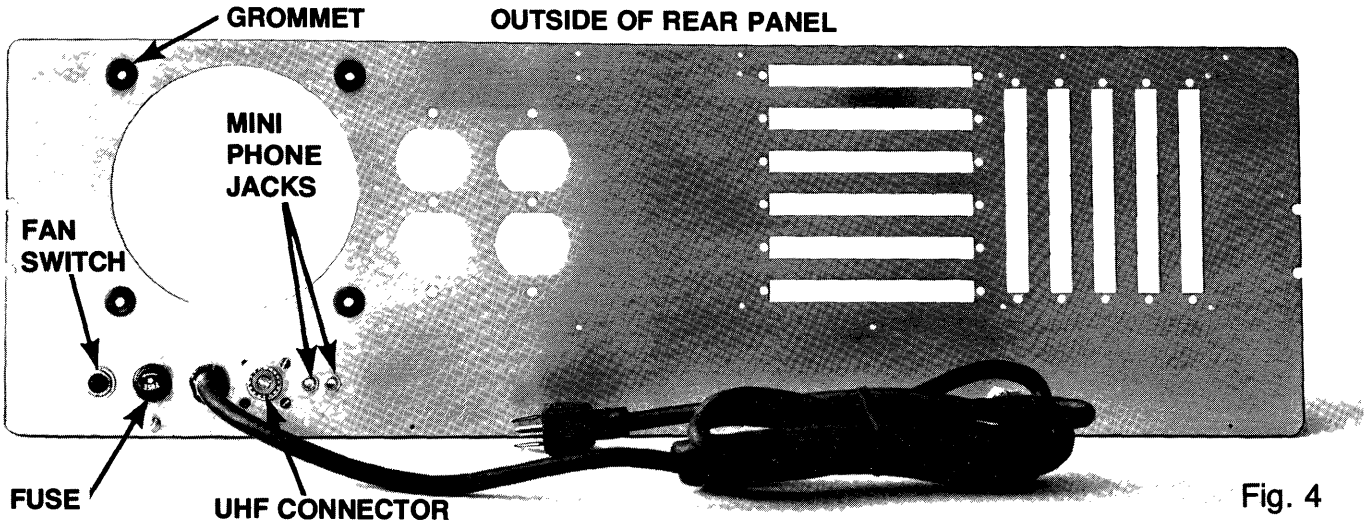

Fig. 4

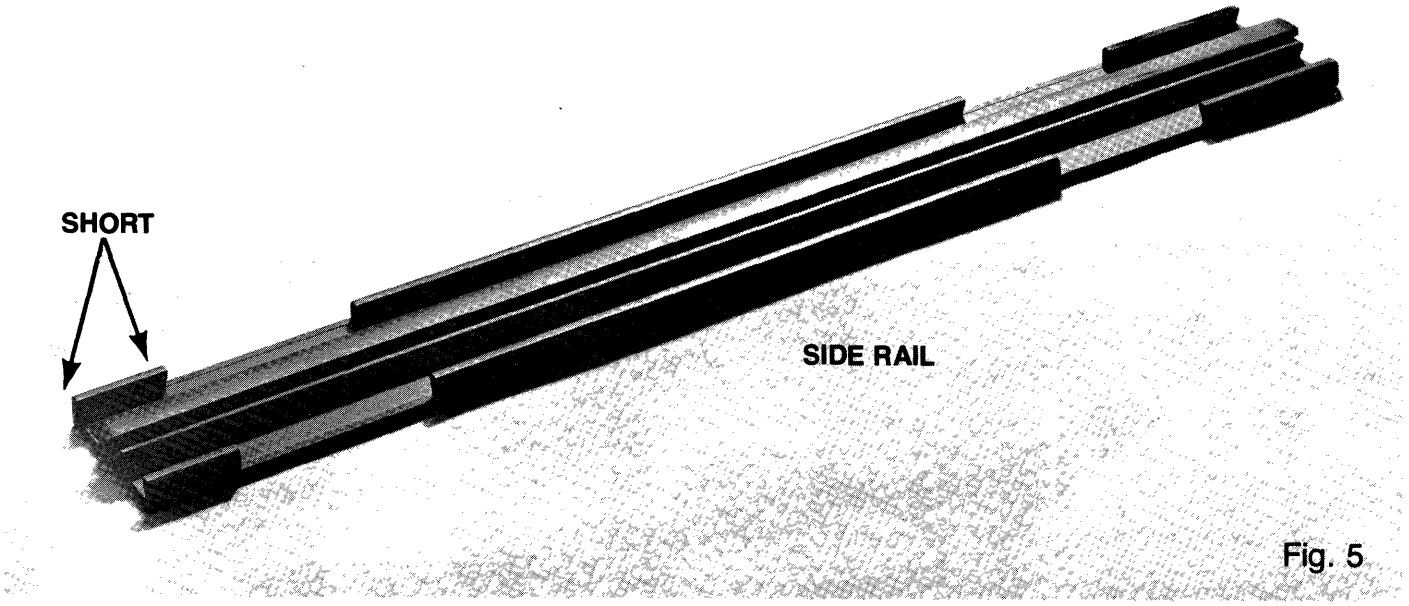

Fig. 5

the digital group
po box 6528 denver, colorado 80206 (303) 777-7133

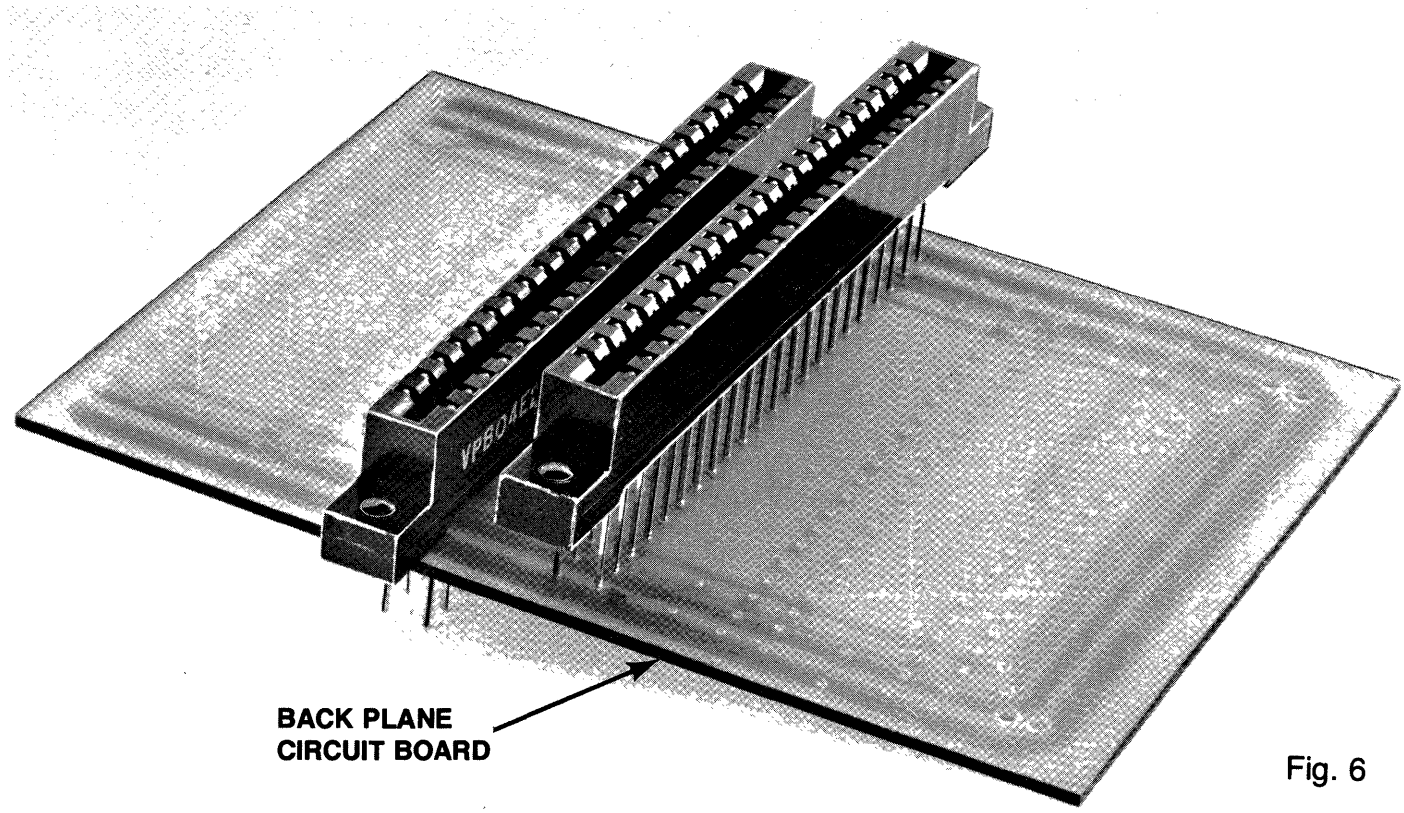

Fig. 6

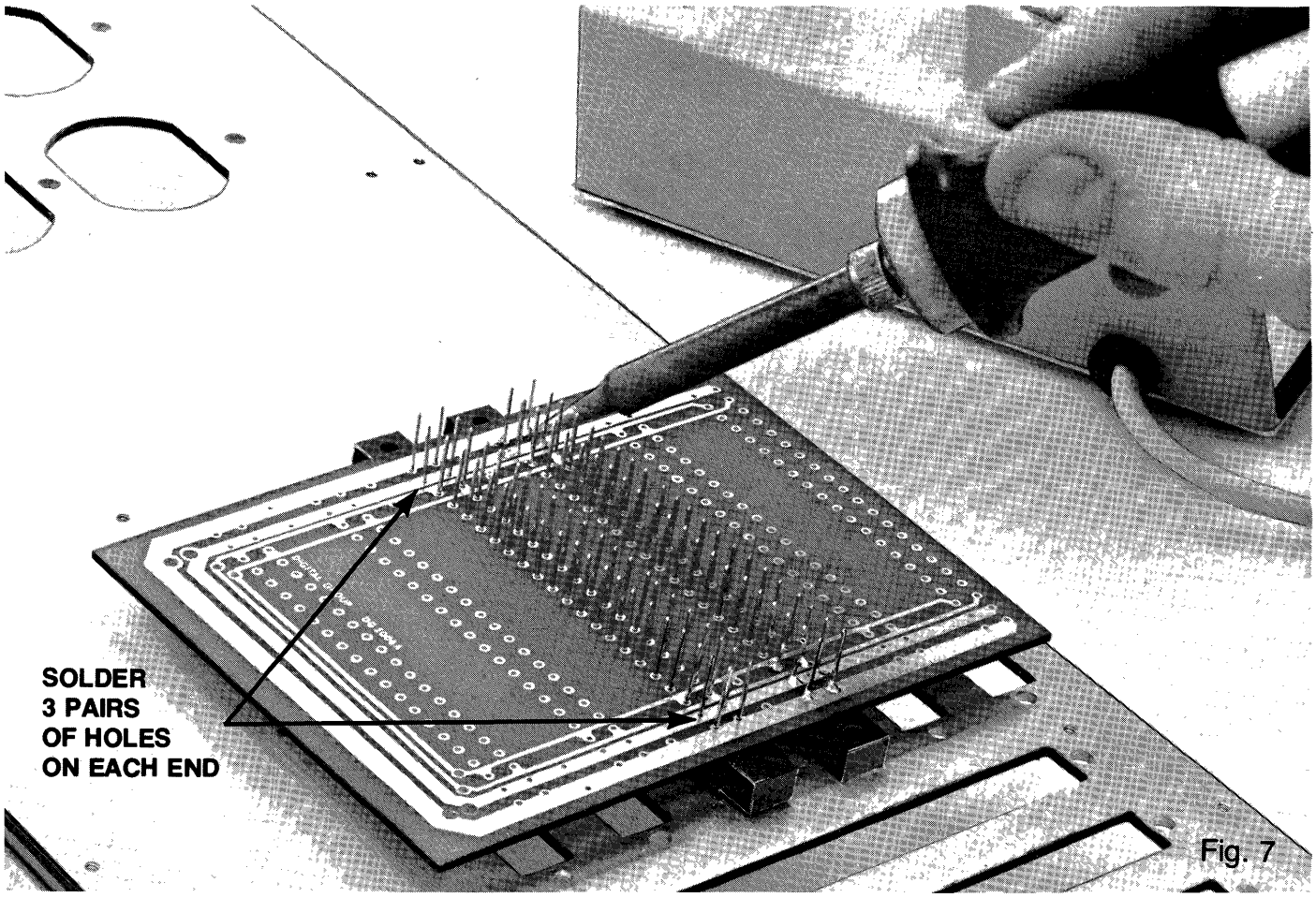

Fig. 7

CPUCAB-R0

the digital group
po box 6528 denver, colorado 80206 (303) 777-7133

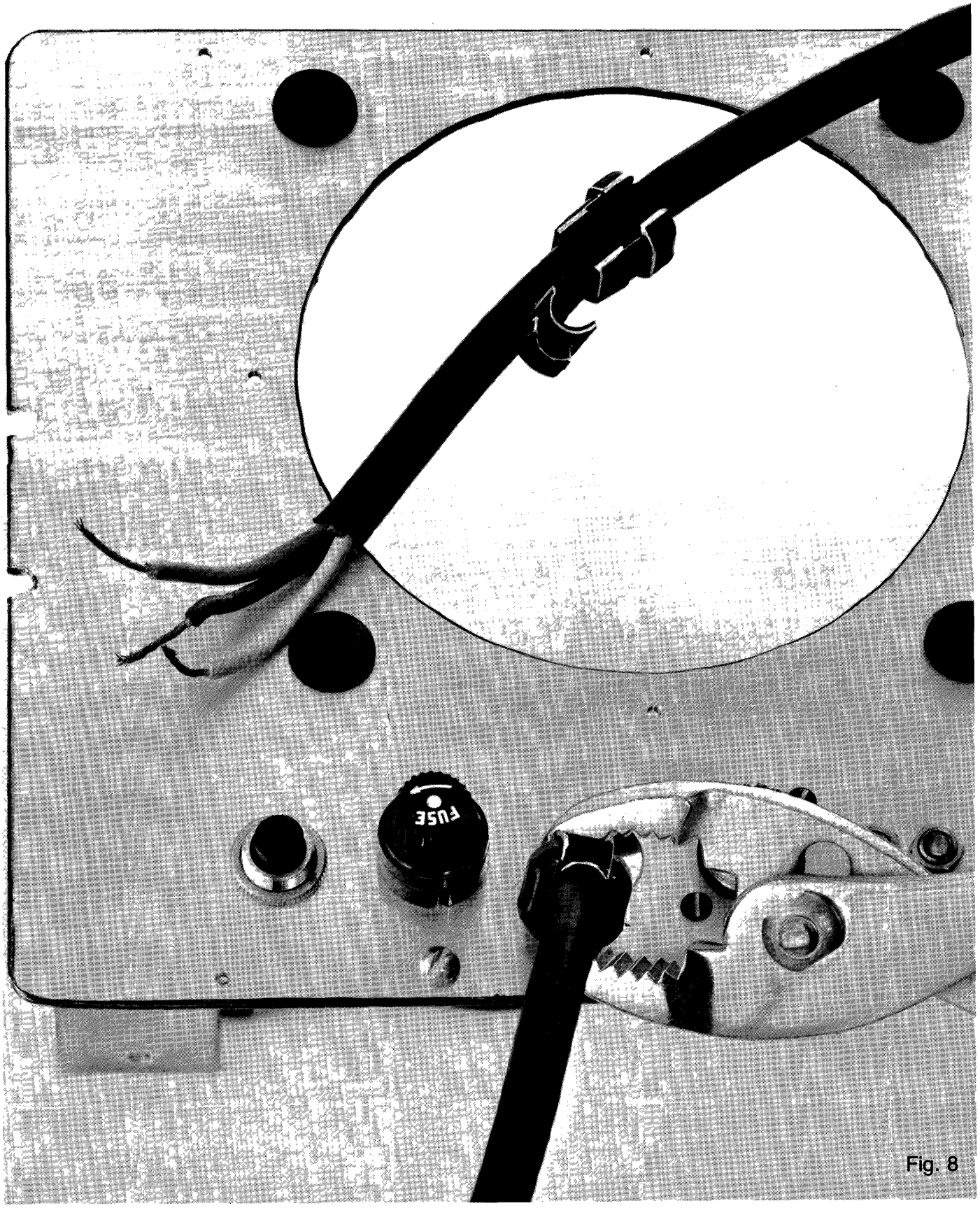

Fig. 8

the digital group
po box 6528 denver, colorado 80206 (303) 777-7133

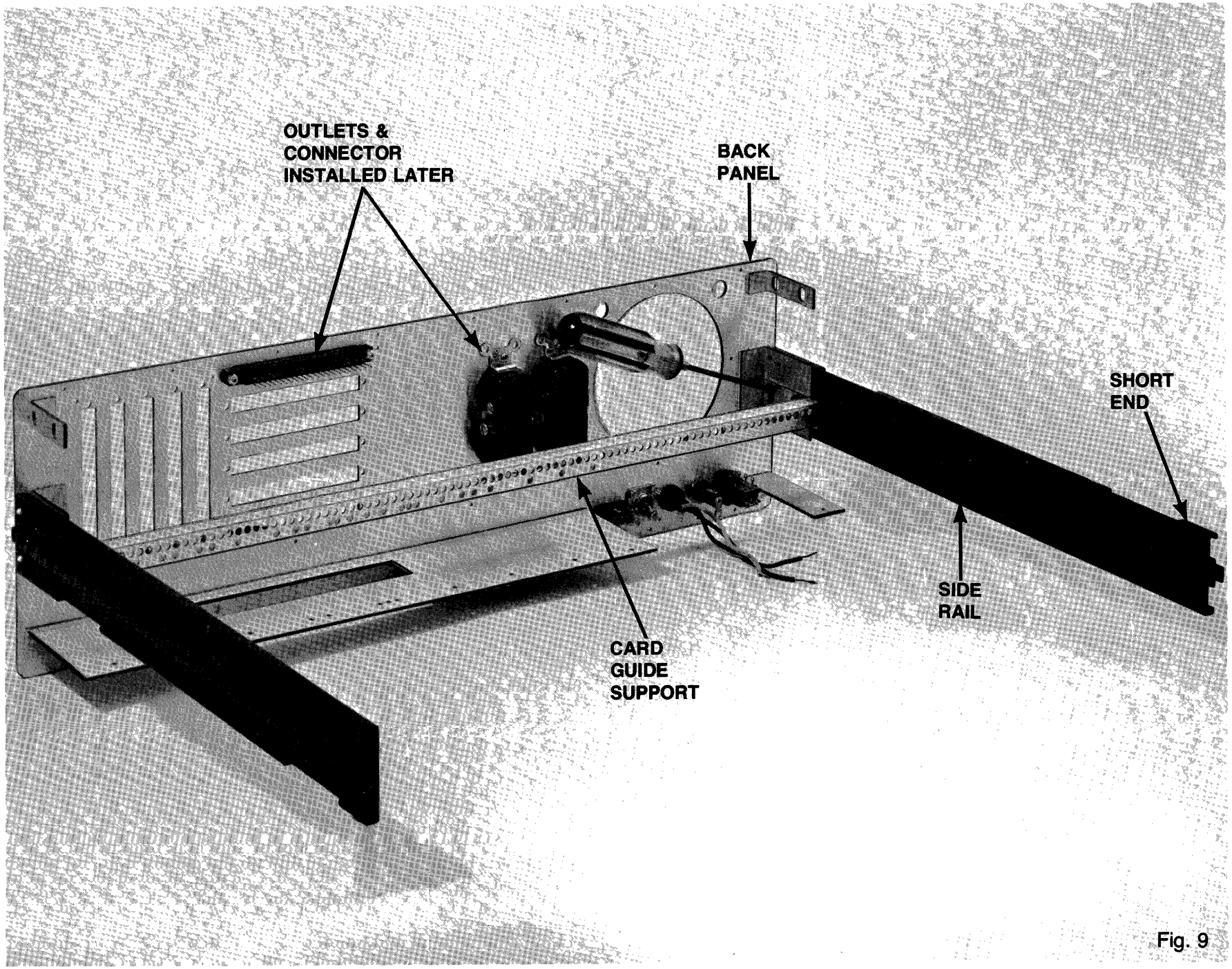
OUTLETS &
CONNECTOR
INSTALLED LATER
BACK
PANEL
SHORT
END
SIDE
RAIL
CARD
GUIDE
SUPPORT

Fig. 9

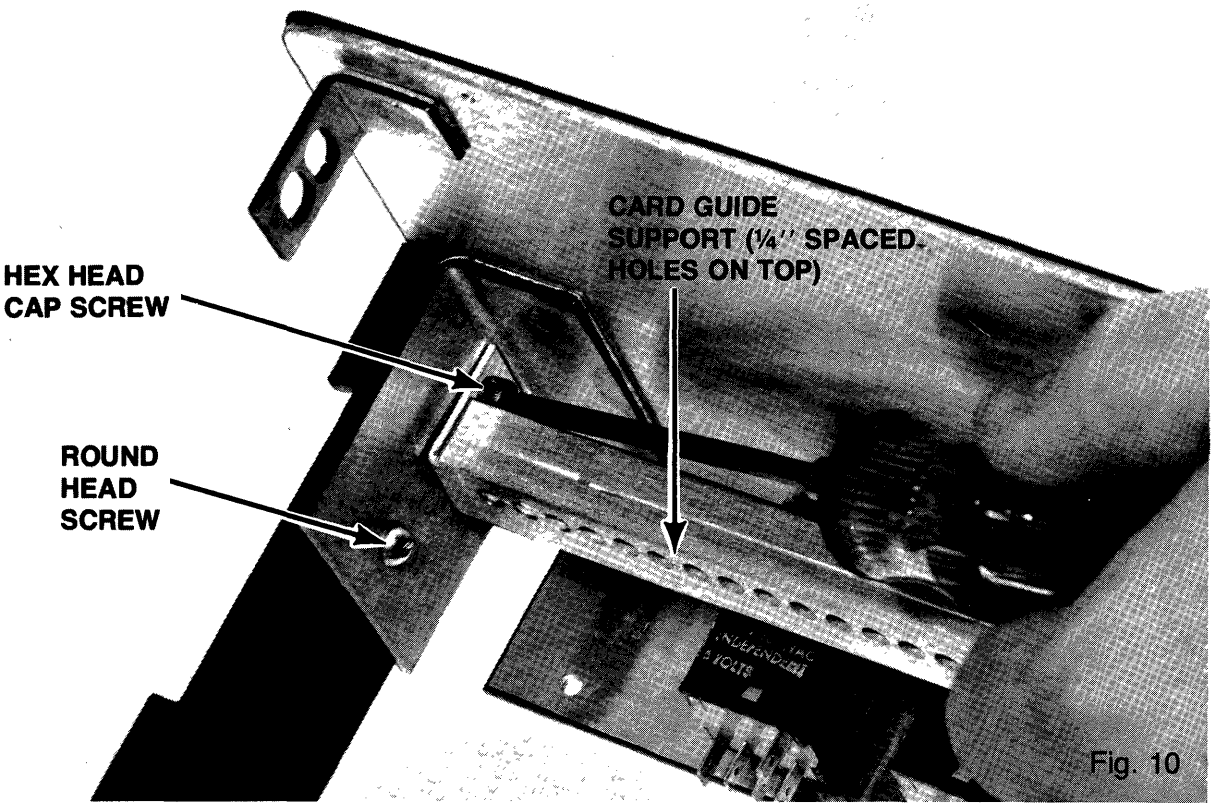

Fig. 10

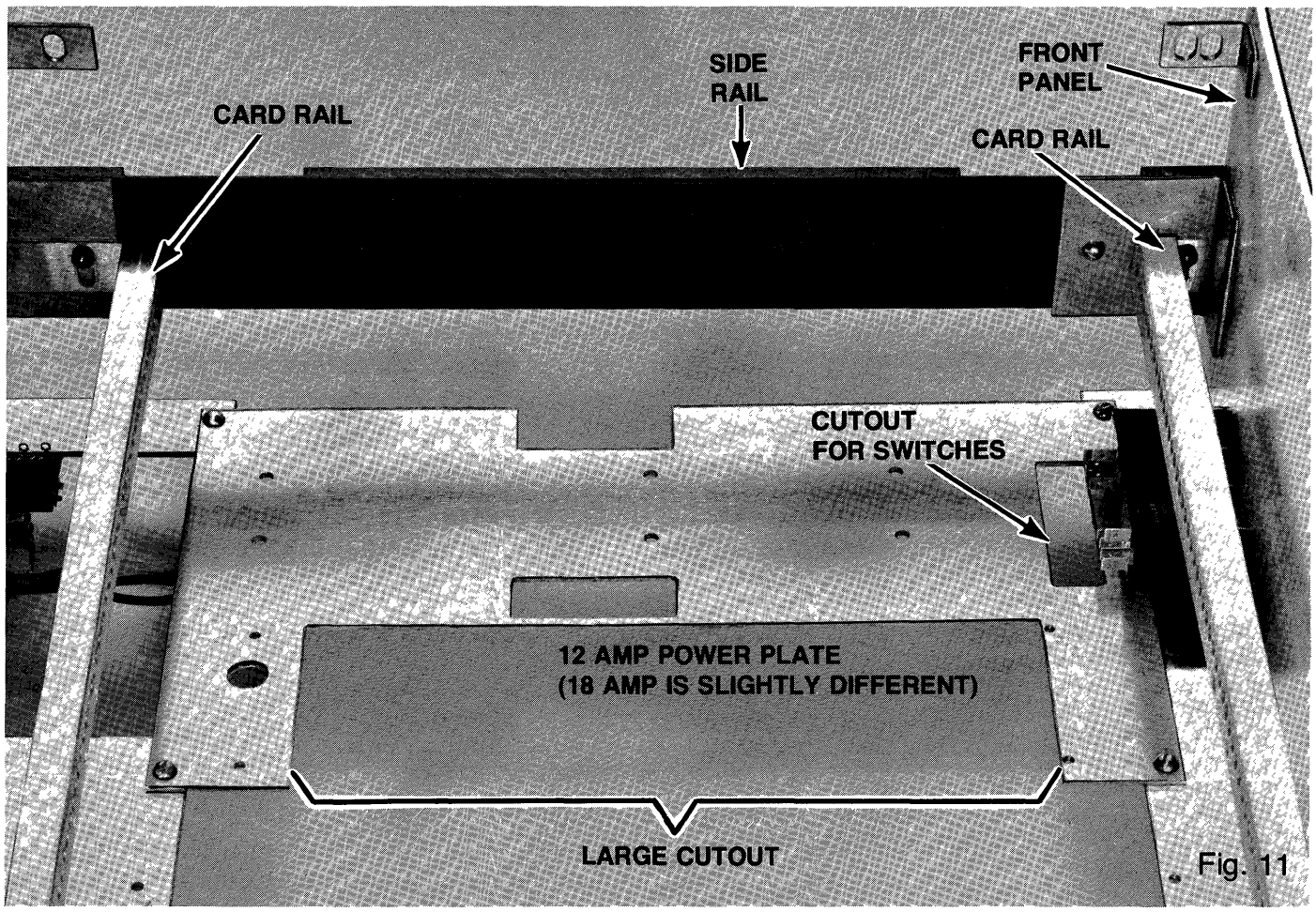

Fig. 11

the digital group
po box 6528 denver, colorado 80206 (303) 777-7133

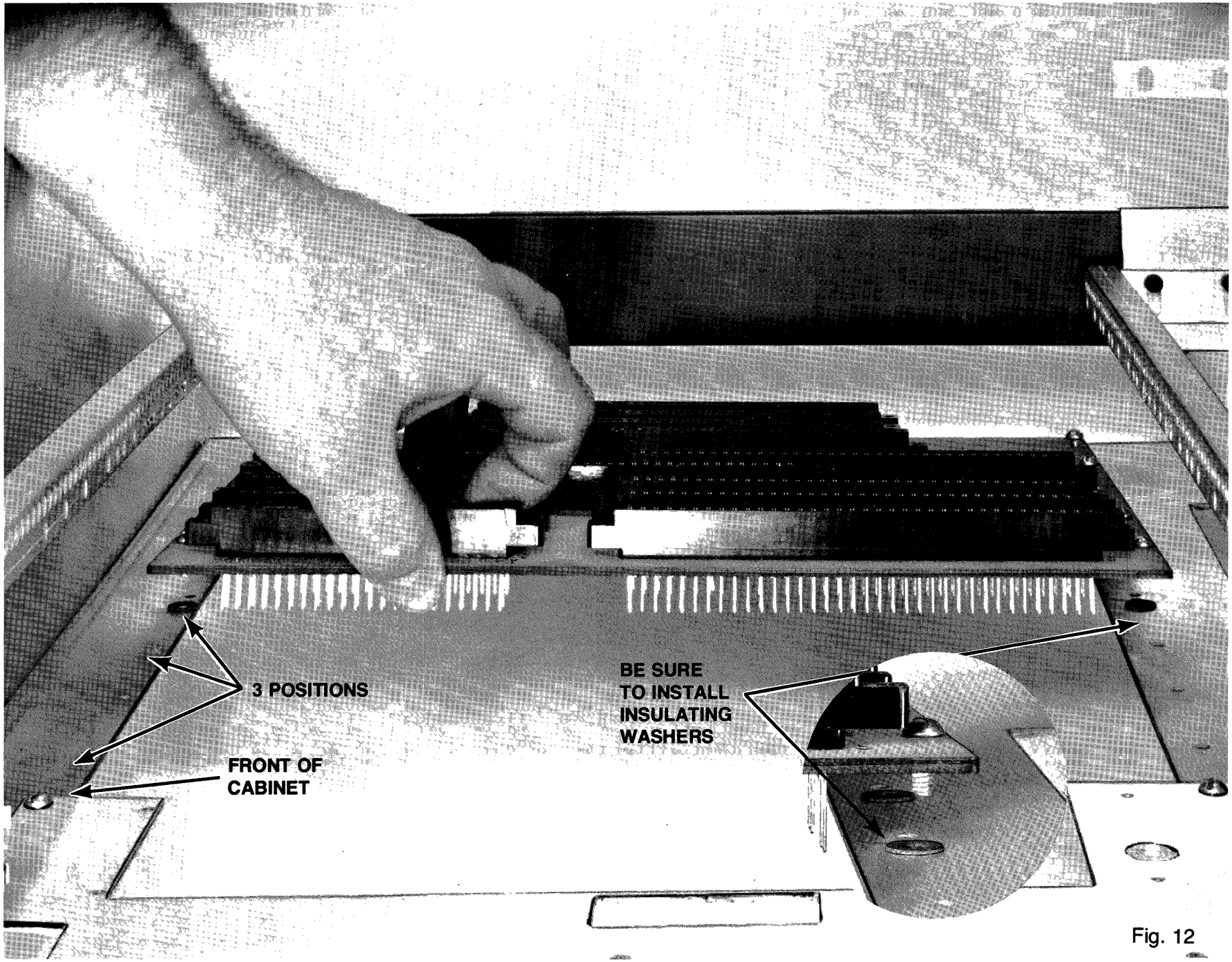
3 POSITIONS
FRONT OF
CABINET
BE SURE
TO INSTALL
INSULATING
WASHERS

Fig. 12

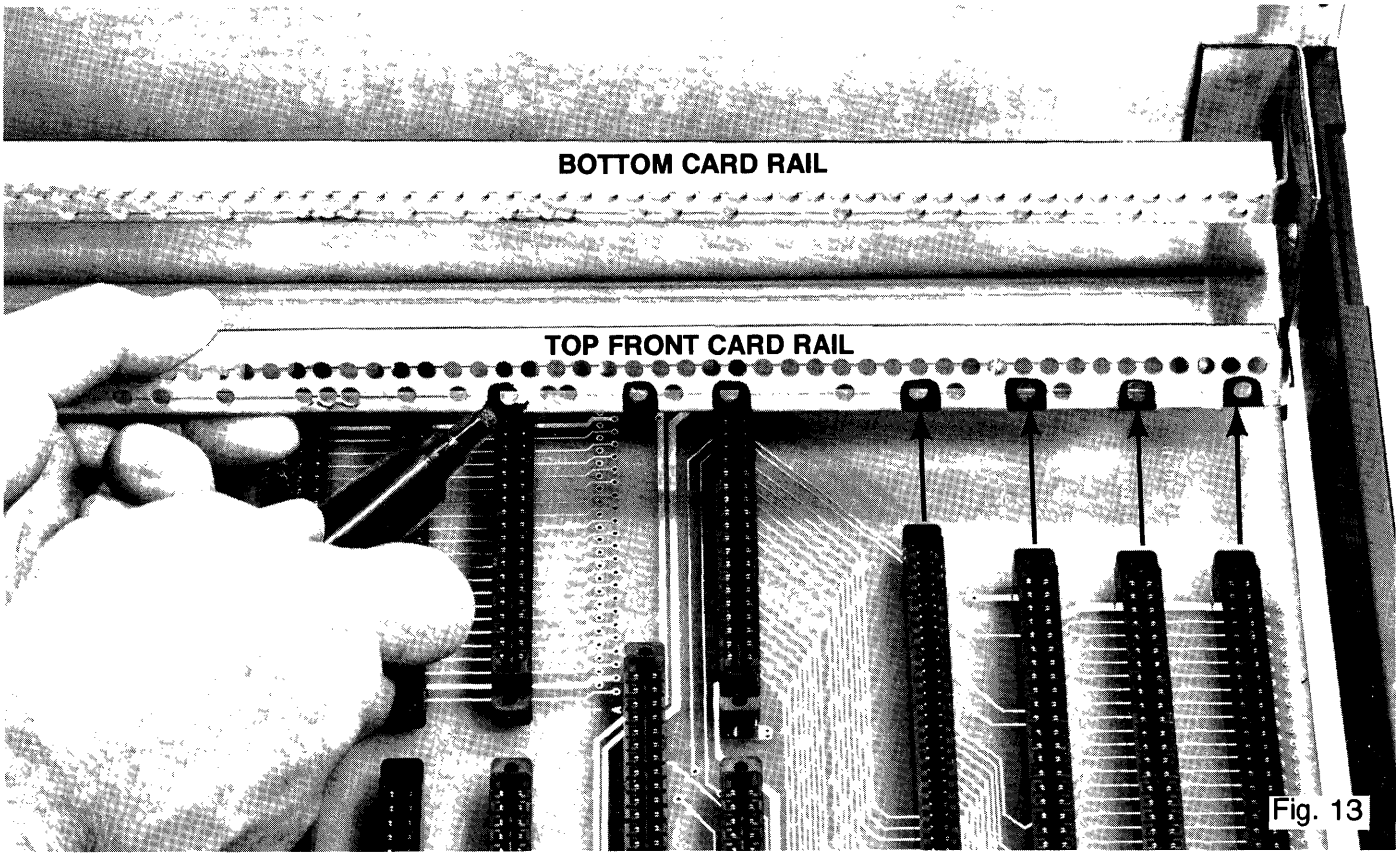

Fig. 13

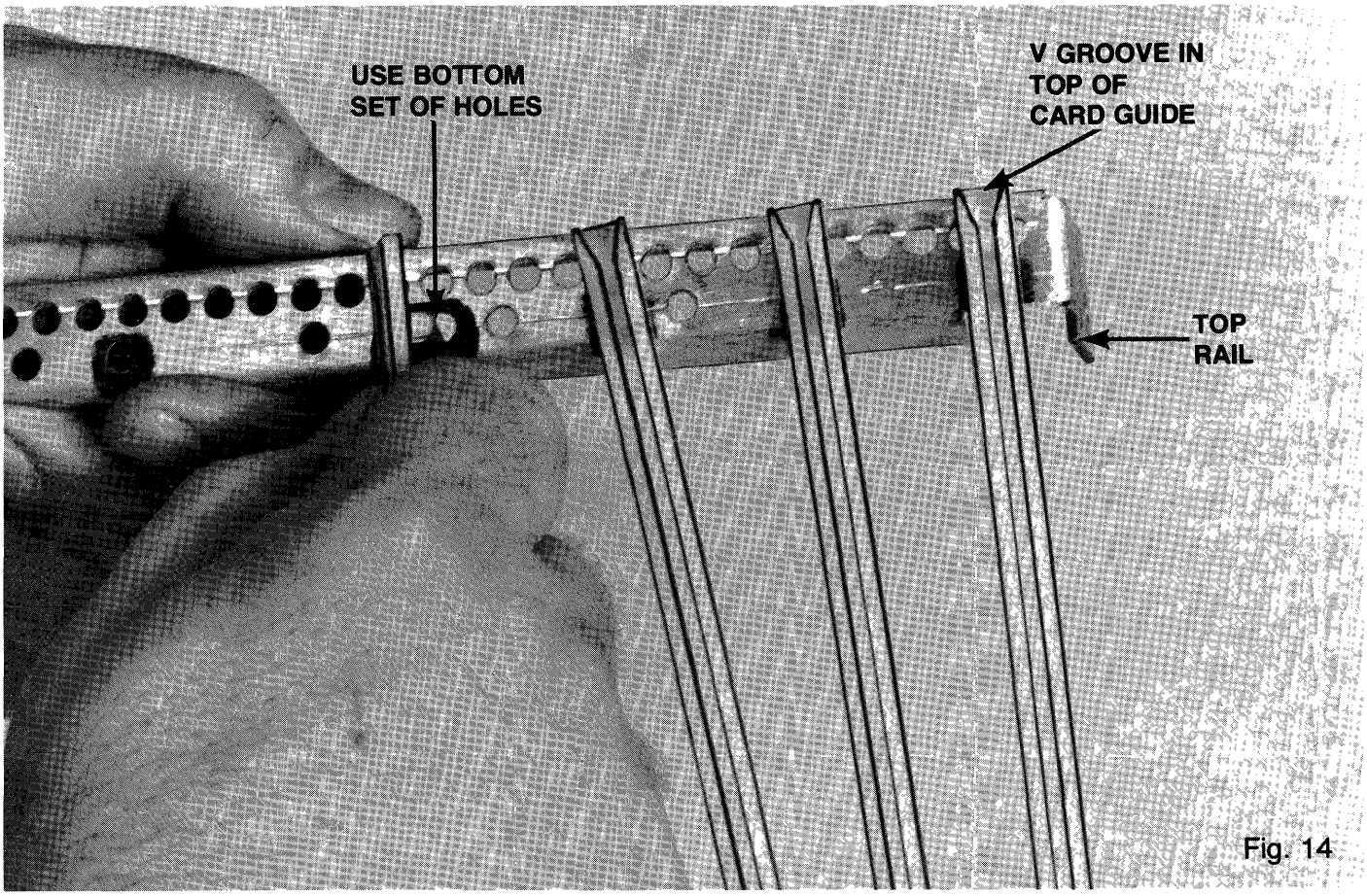

Fig. 14

the digital group
po box 6528 denver, colorado 80206 (303) 777-7133

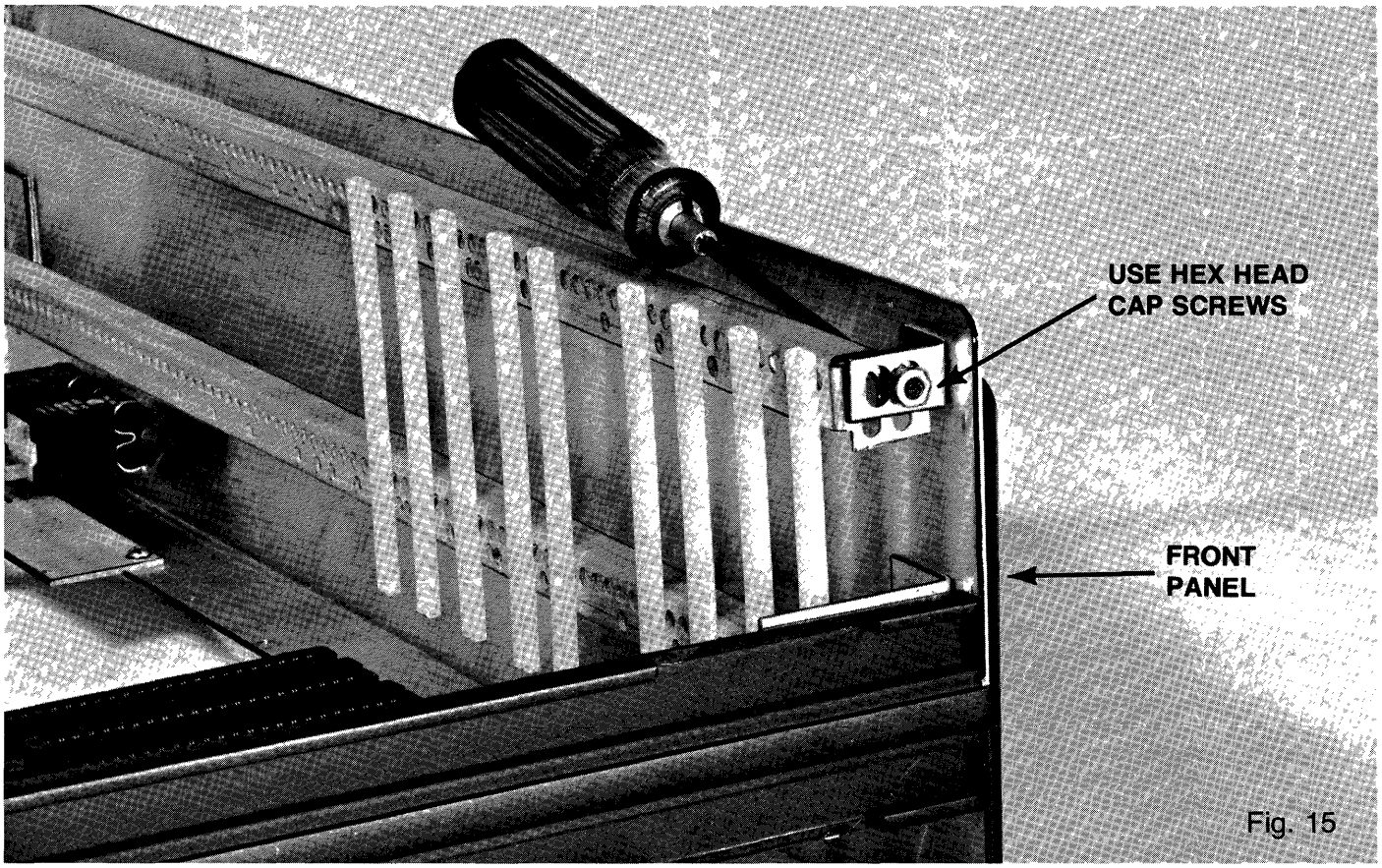

Fig. 15

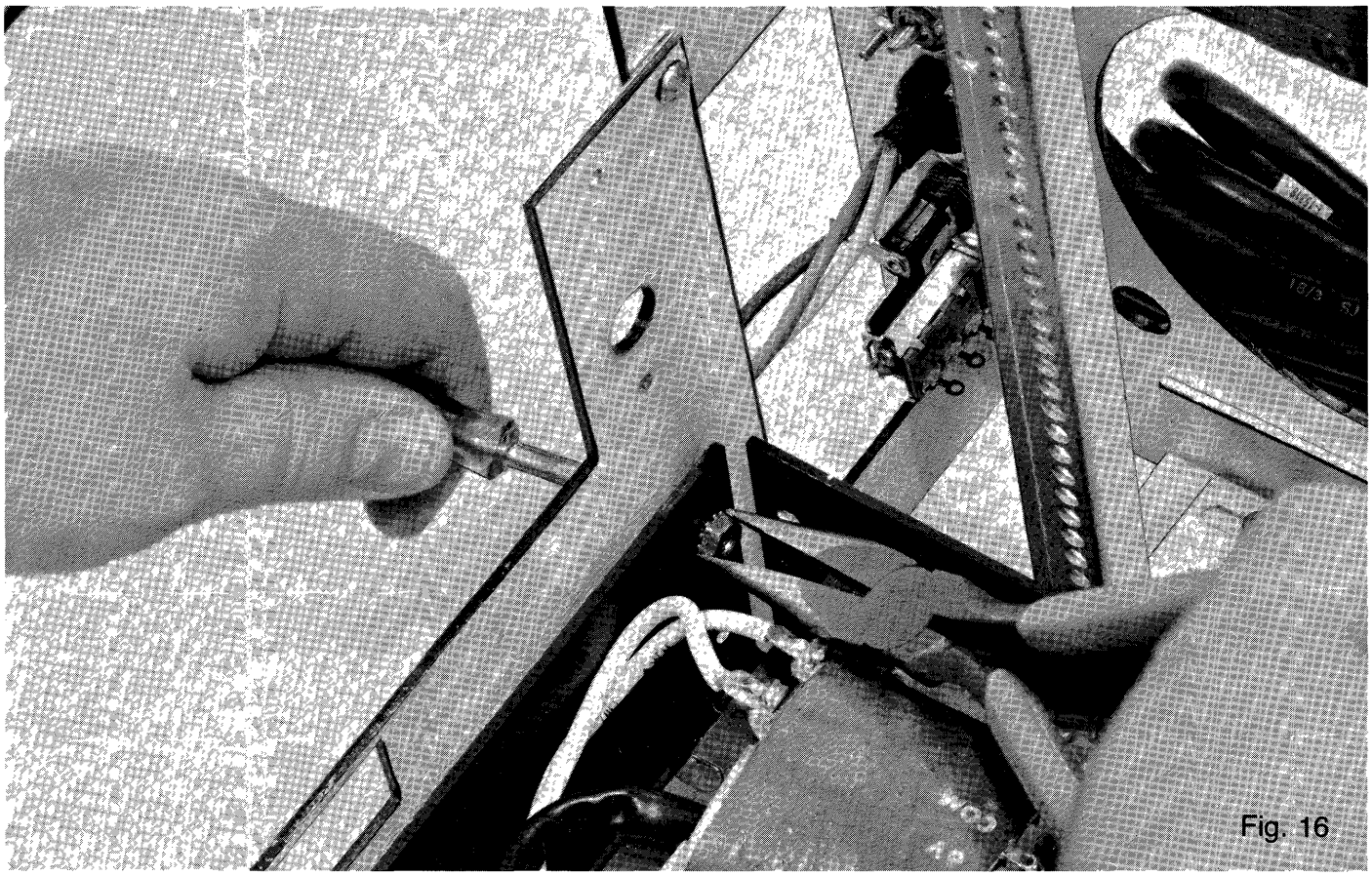
Fig. 16

the digital group
po box 6528 denver, colorado 80206 (303) 777-7133

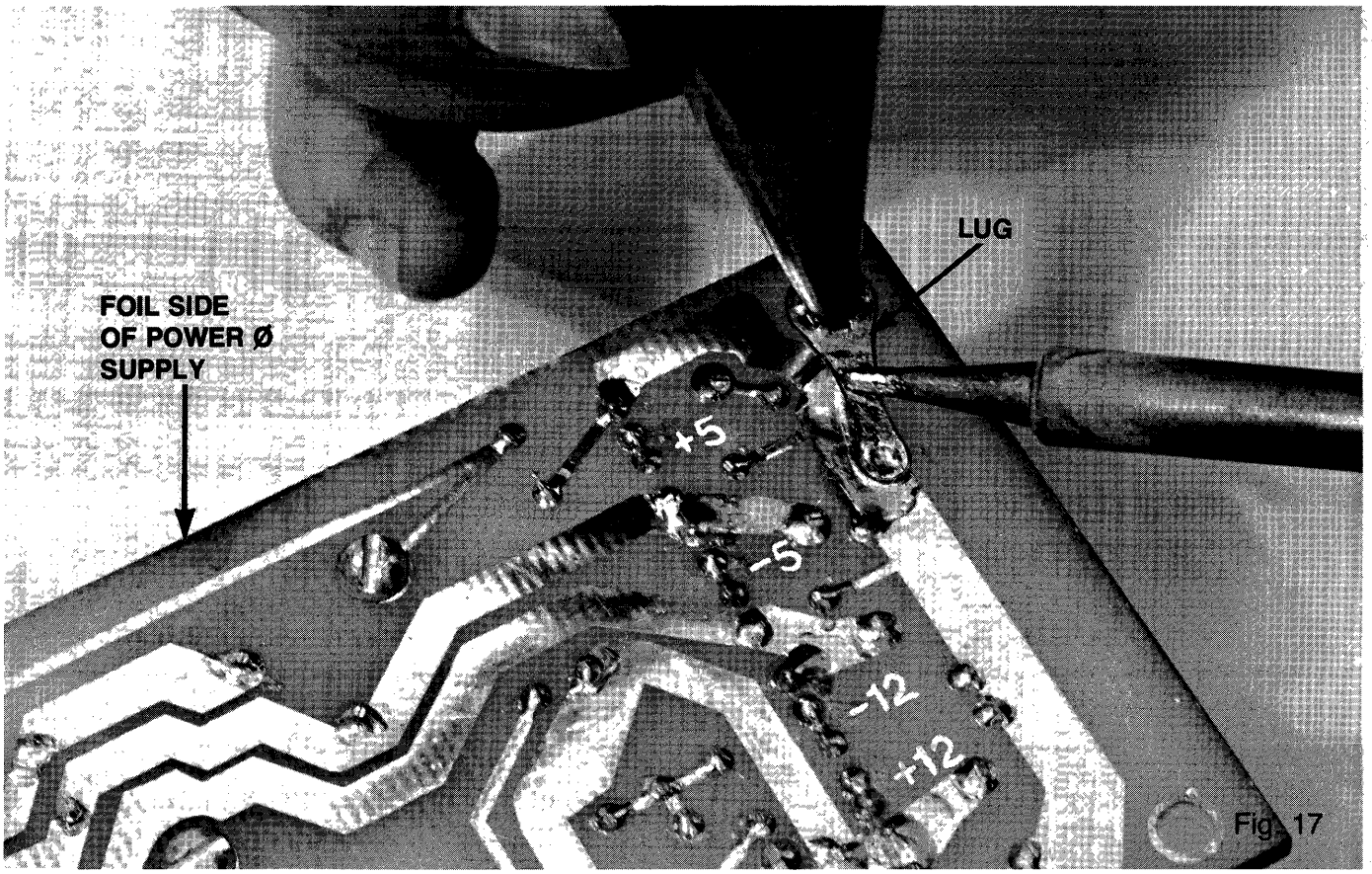

Fig. 17

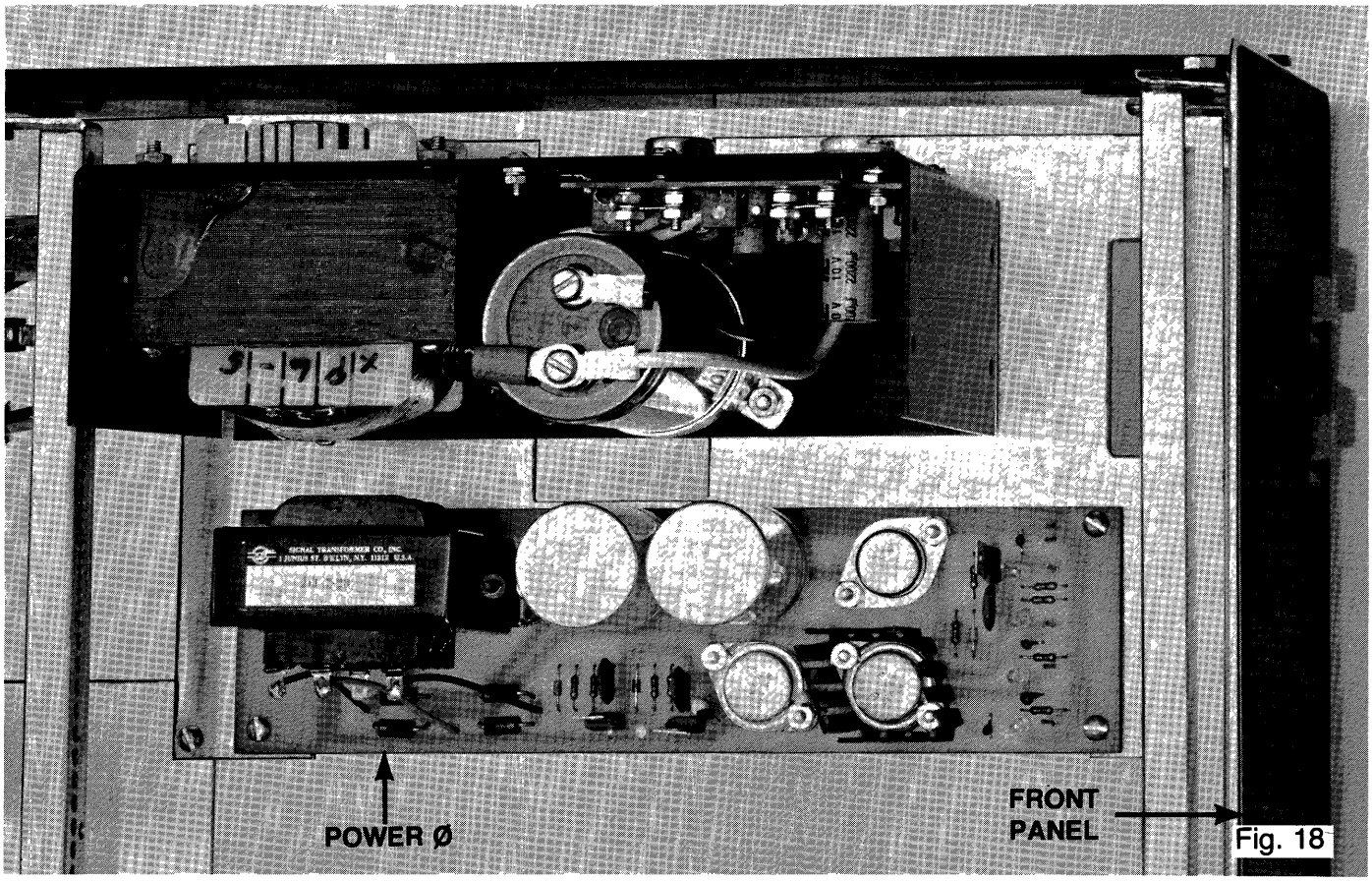

Fig. 18

the digital group
po box 6528 denver, colorado 80206 (303) 777-7133

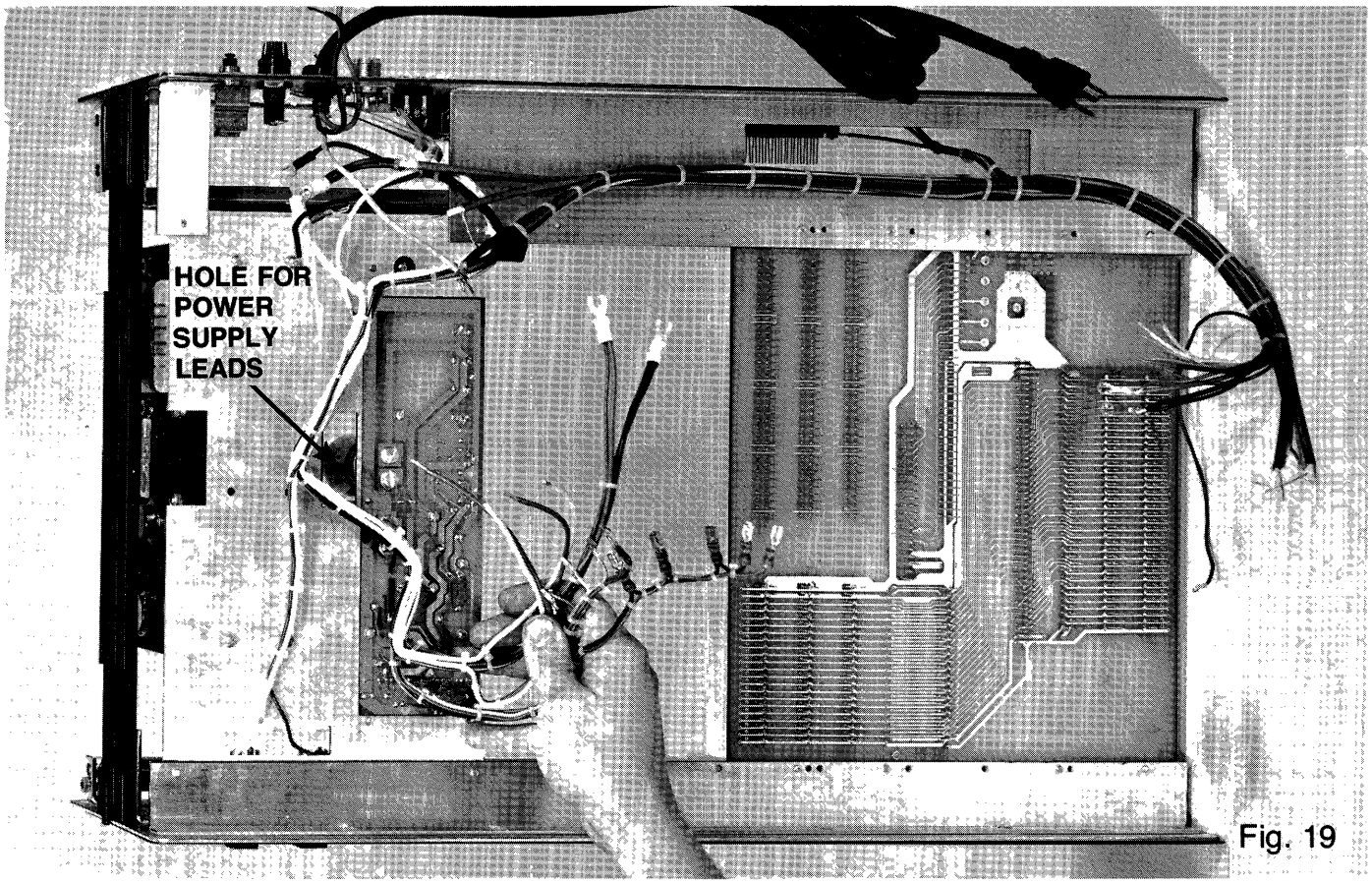

Fig. 19

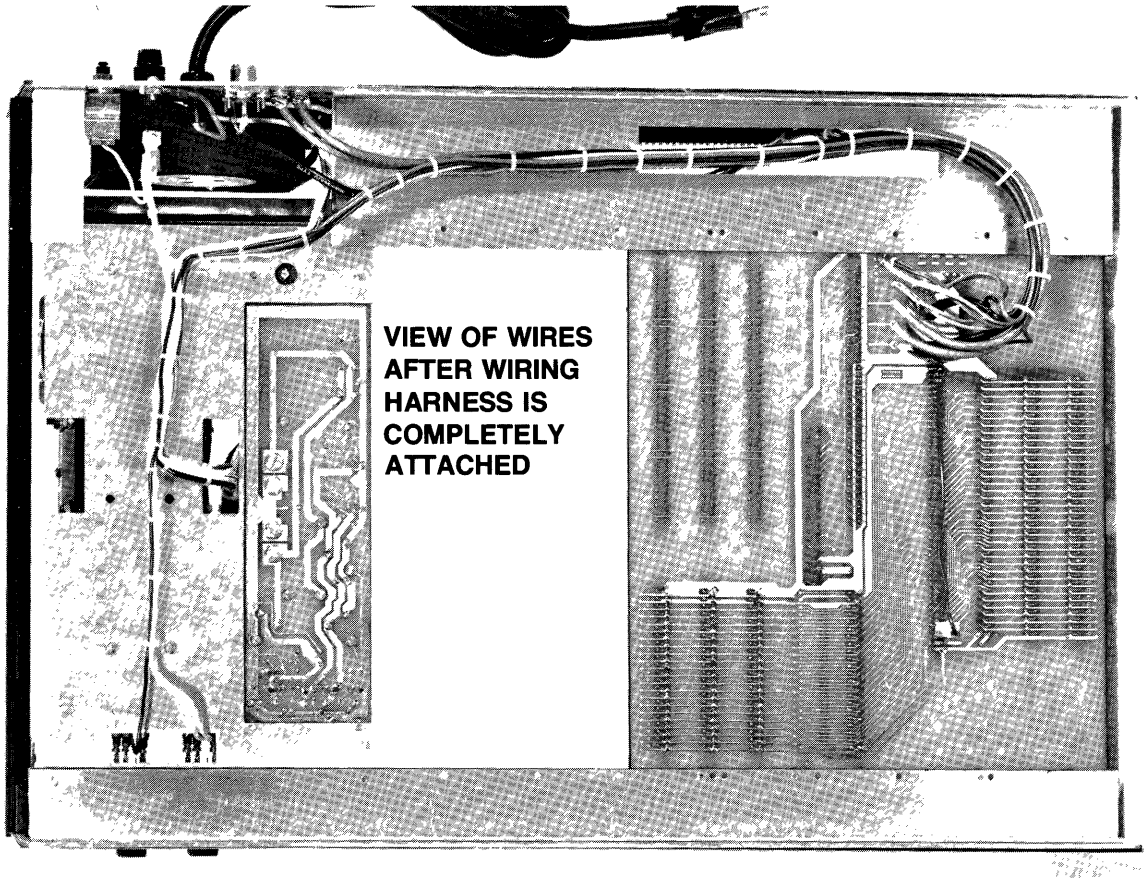

Fig. 20

the digital group inc
po box 6528 denver, colorado 80206 (303) 777-7133

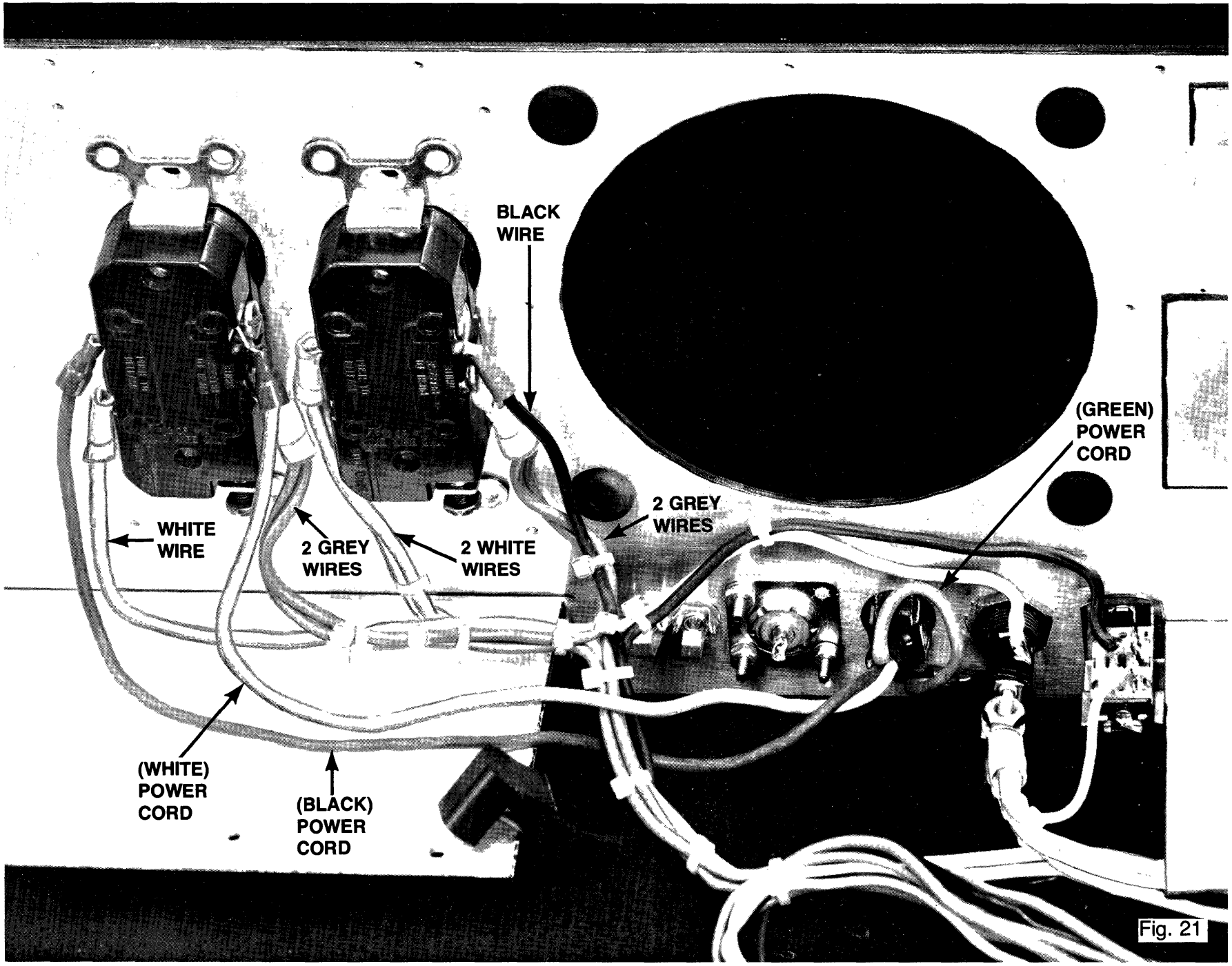

Fig. 21

the digital group
po box 6528 denver, colorado 80206 (303) 777-7133

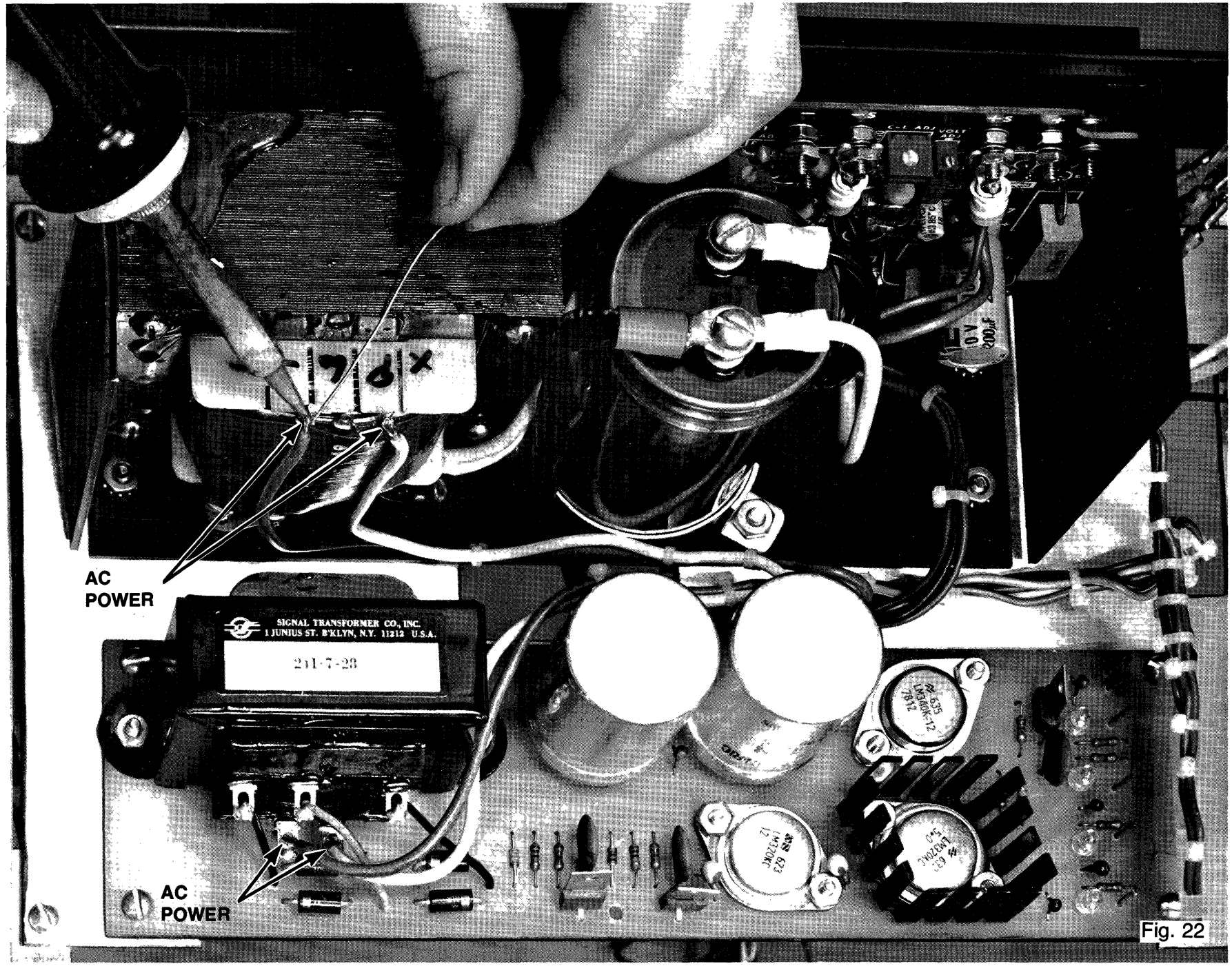

Fig. 22

the digital group
po box 6528 denver, colorado 80206 (303) 777-7133

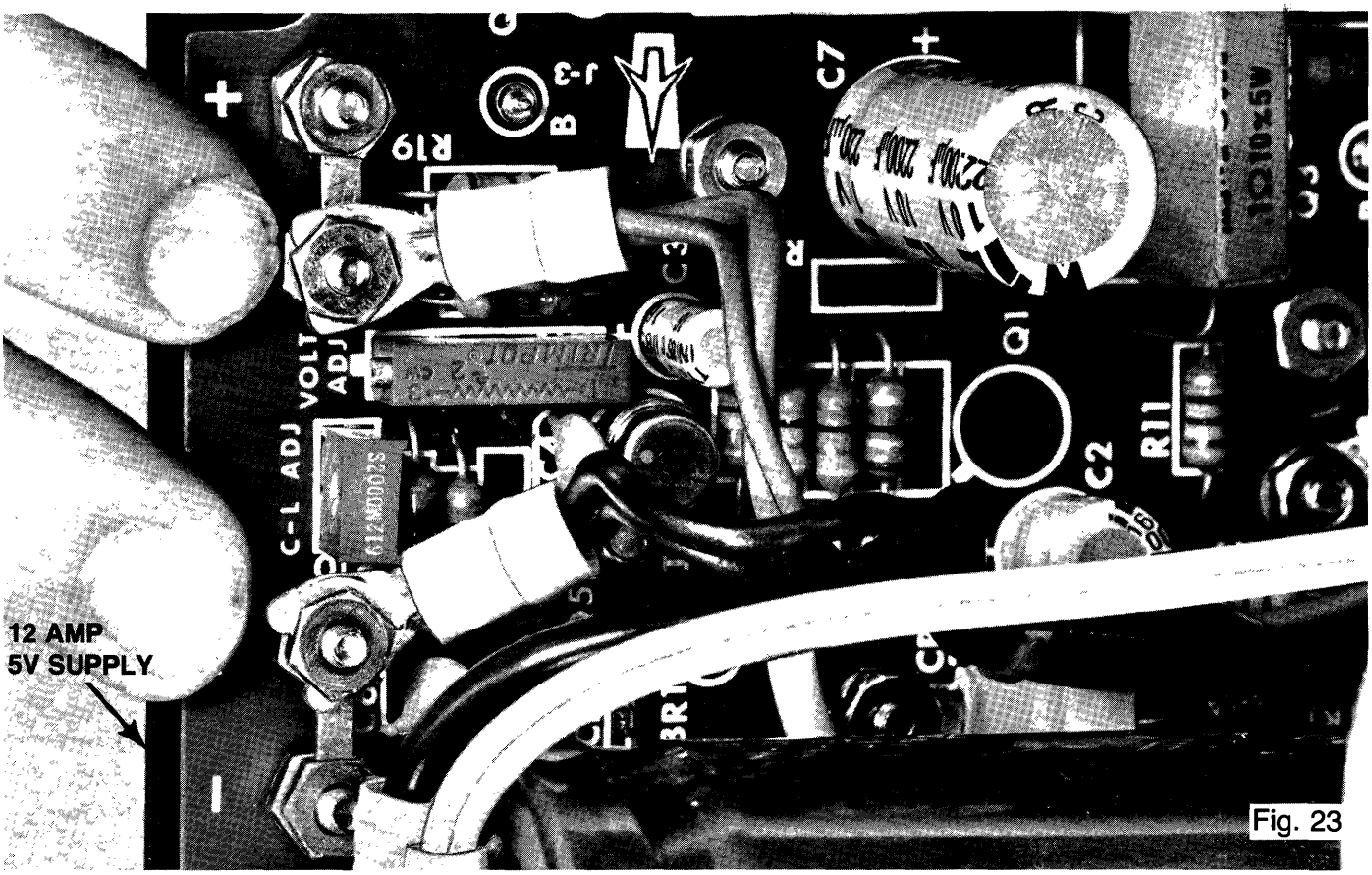

Fig. 23

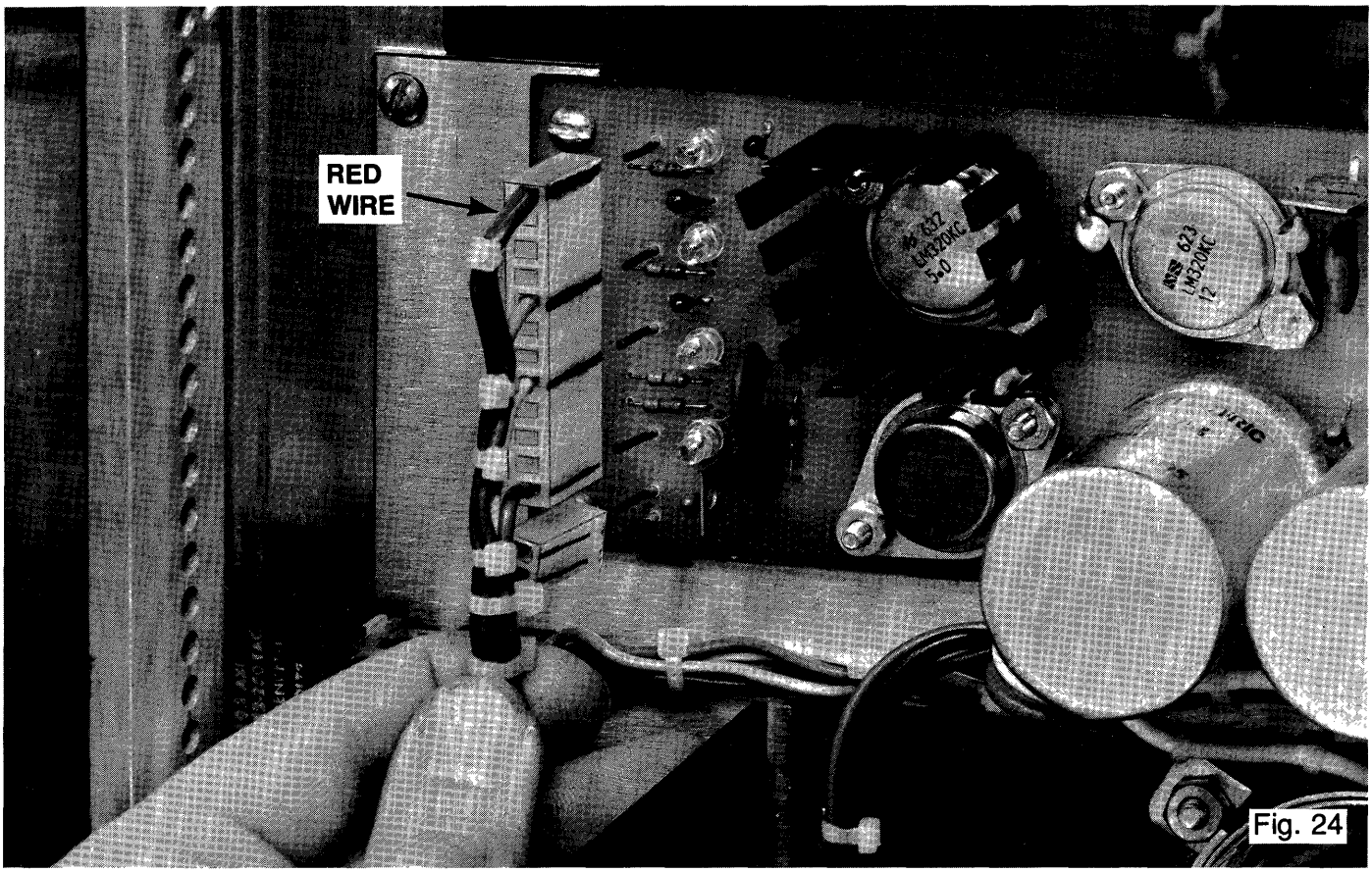

Fig. 24

the digital group
po box 6528 denver, colorado 80206 (303) 777-7133

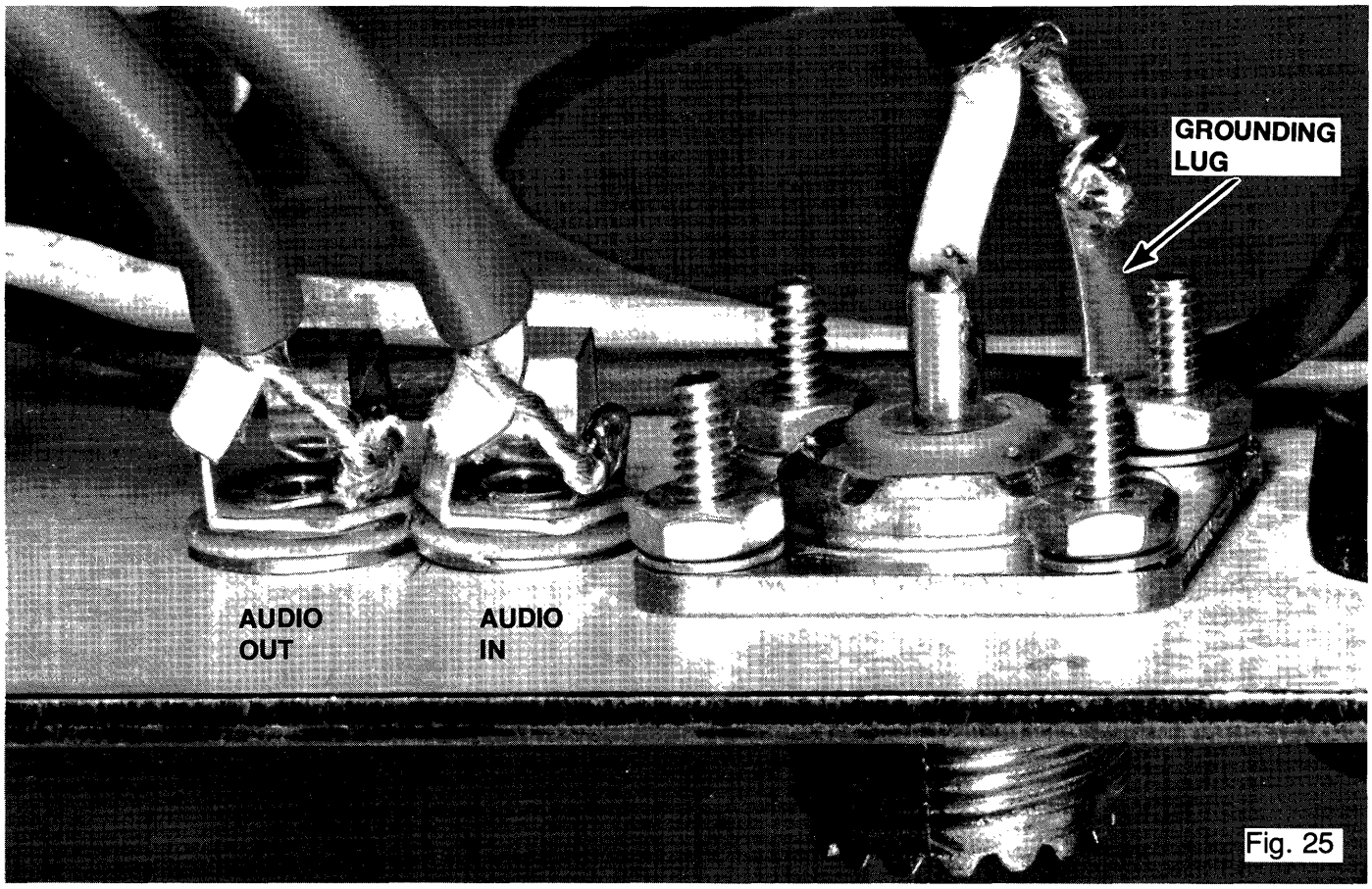

Fig. 25

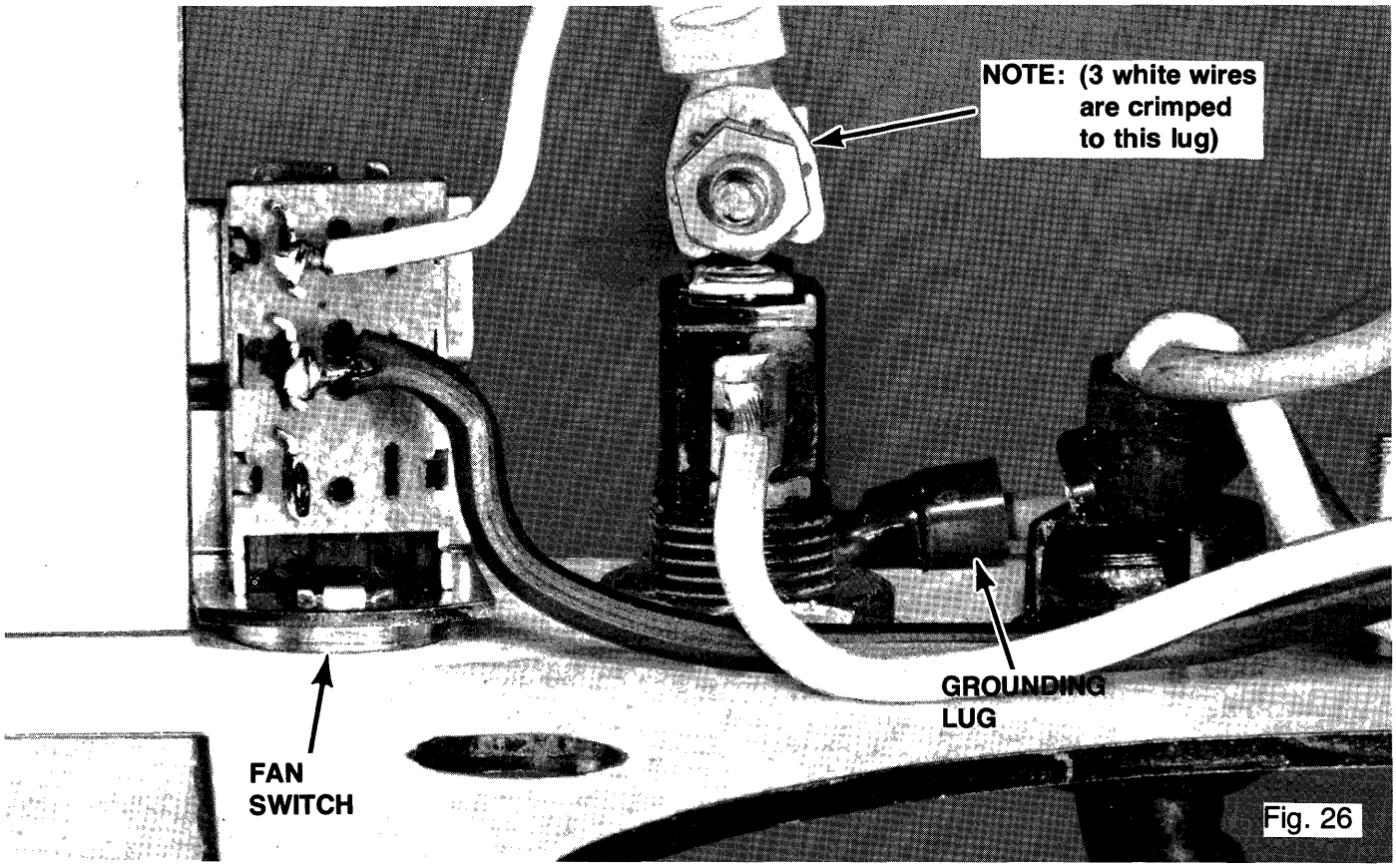

Fig. 26

the digital group
po box 6528 denver, colorado 80206 (303) 777-7133

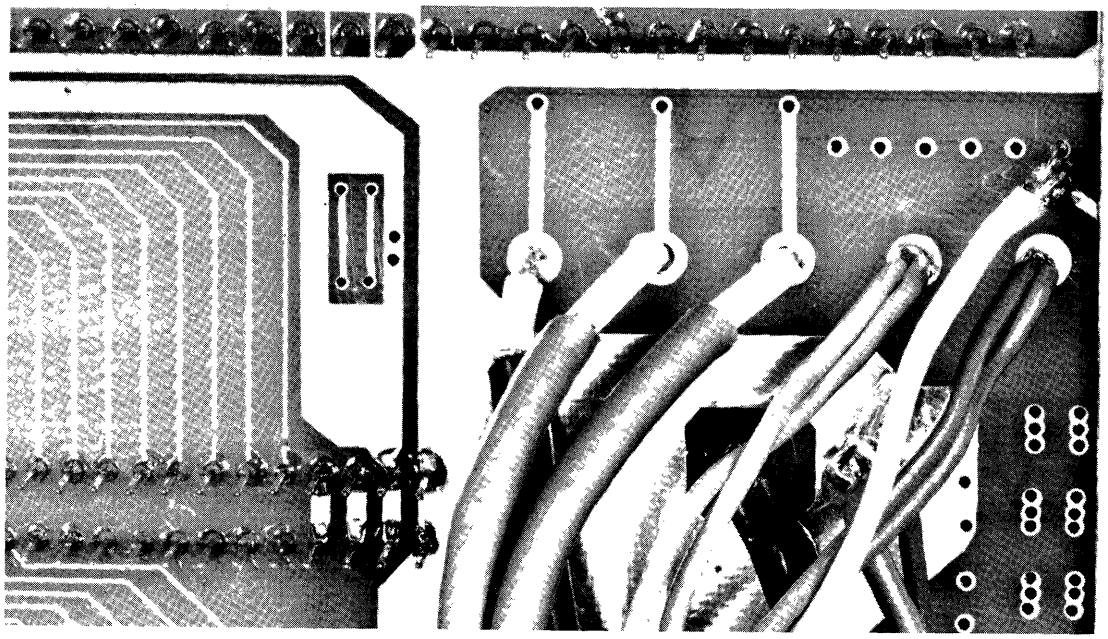

Fig. 27

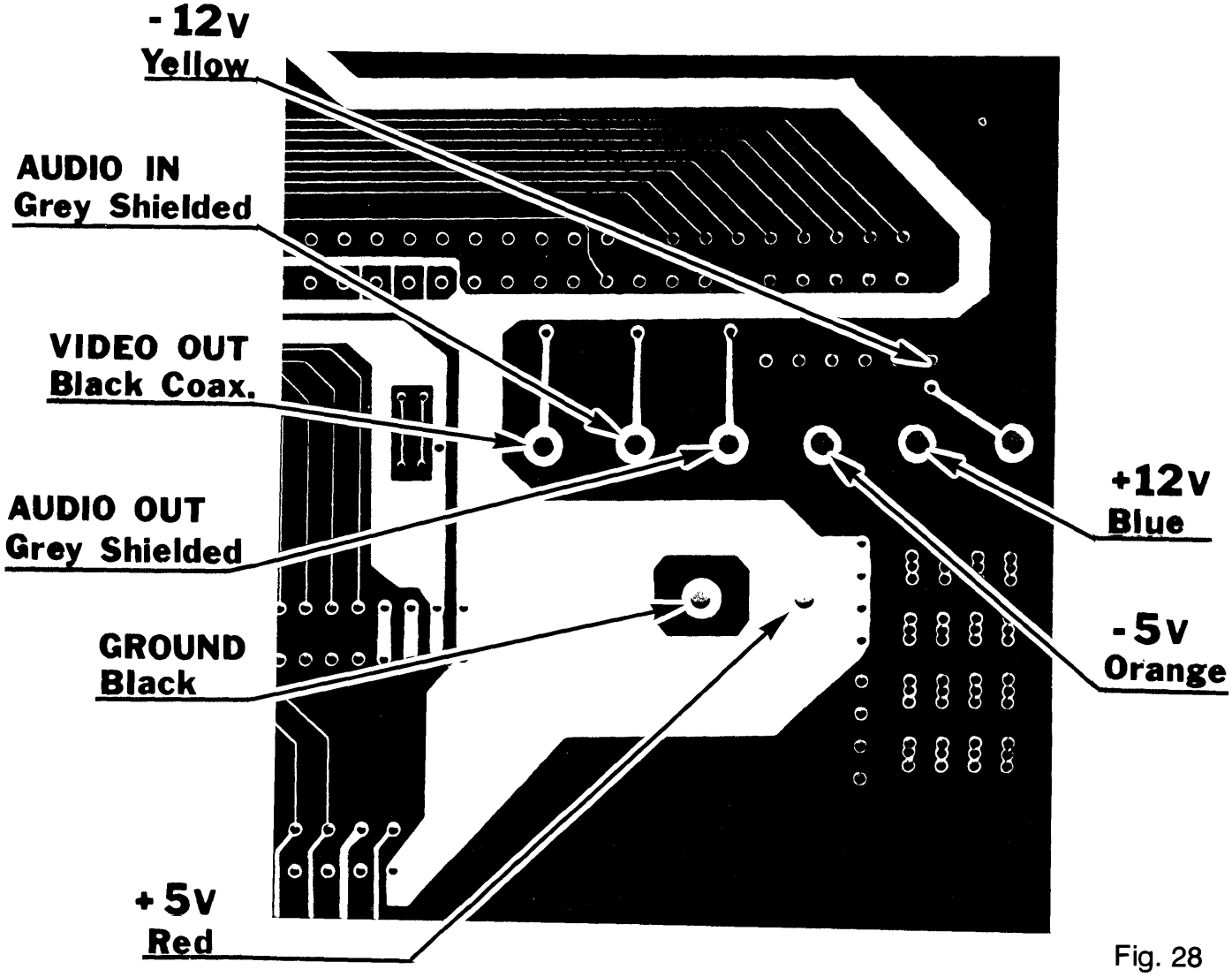

Fig. 28

the digital group
po box 6528 denver, colorado 80206 (303) 777-7133

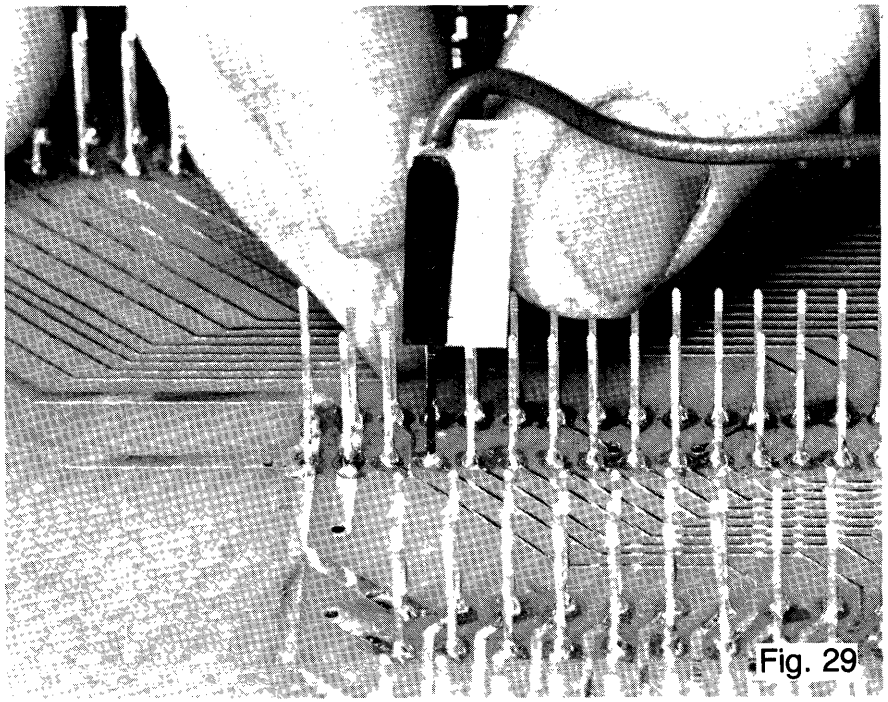

Fig. 29

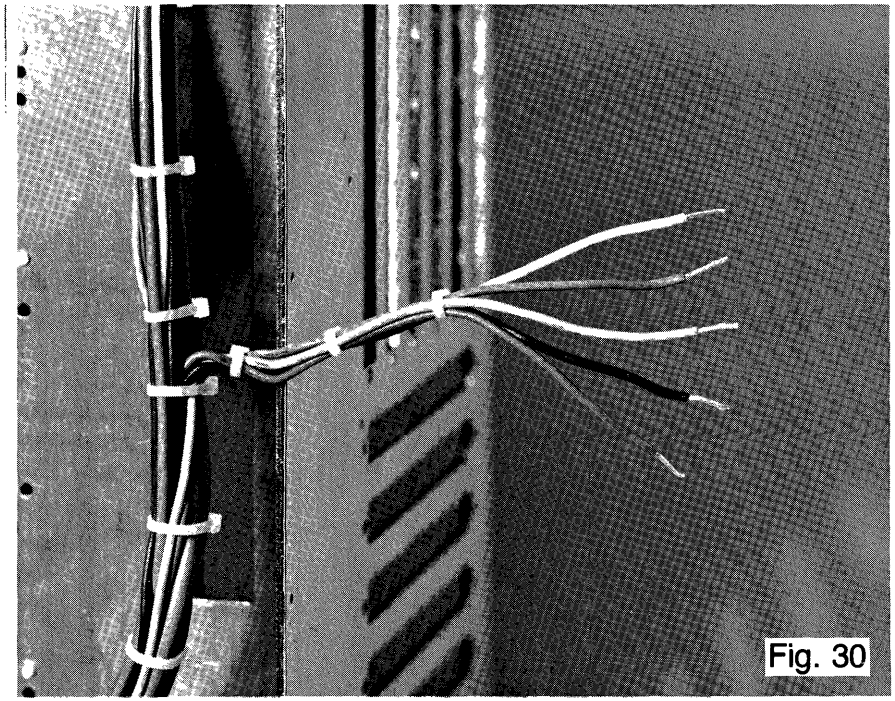

Fig. 30

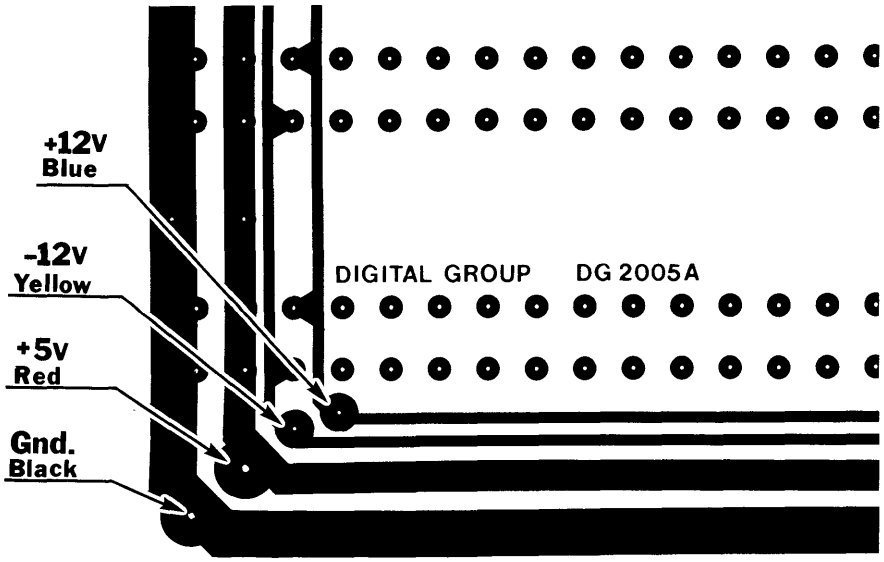

Fig. 31

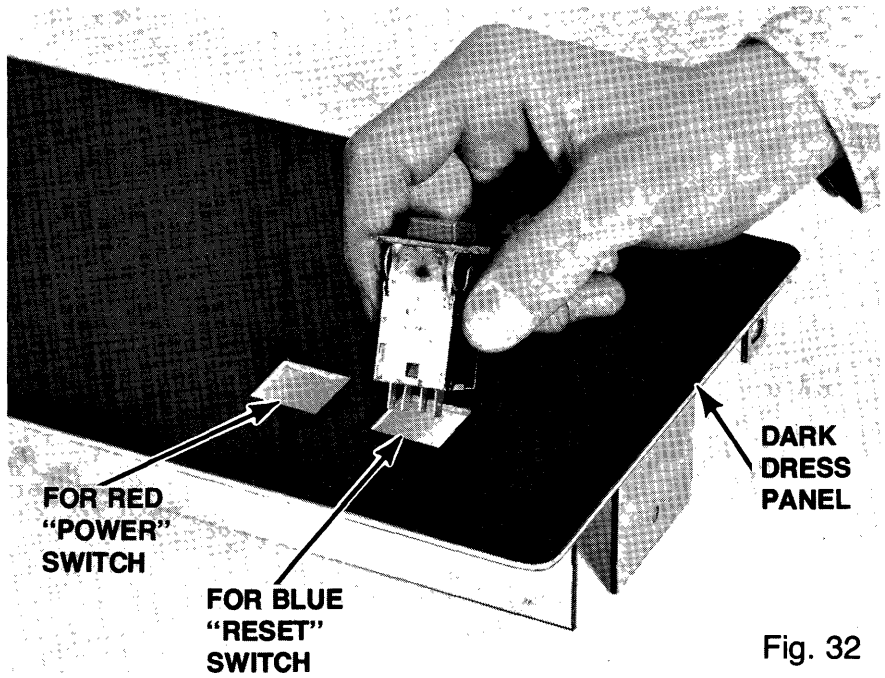

Fig. 32

the digital group
po box 6528 denver, colorado 80206 (303) 777-7133

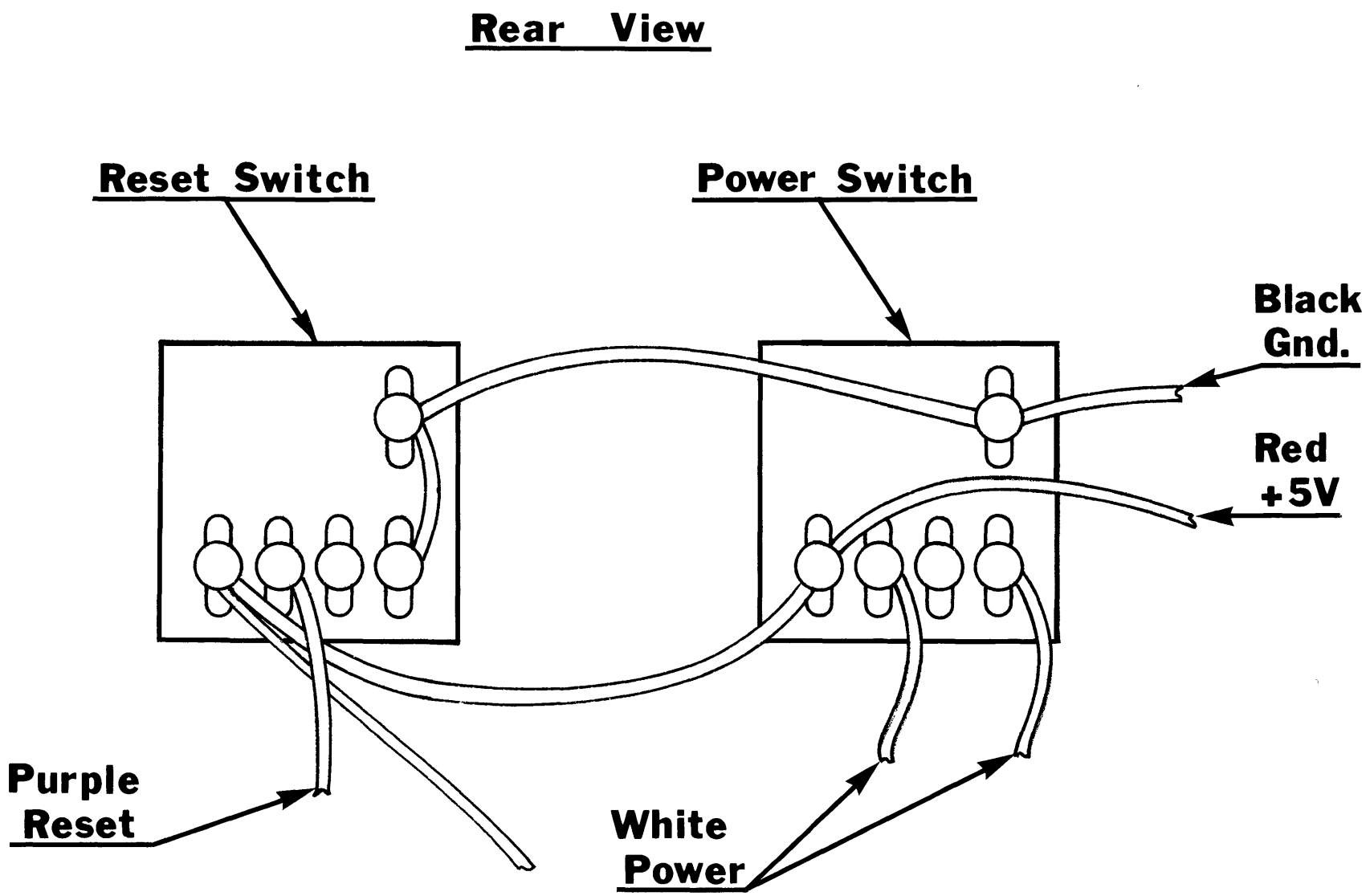
Rear View
Reset Switch
Power Switch
Black
Gnd.
Red
+5V
Purple
Reset
White
Power

Fig. 33

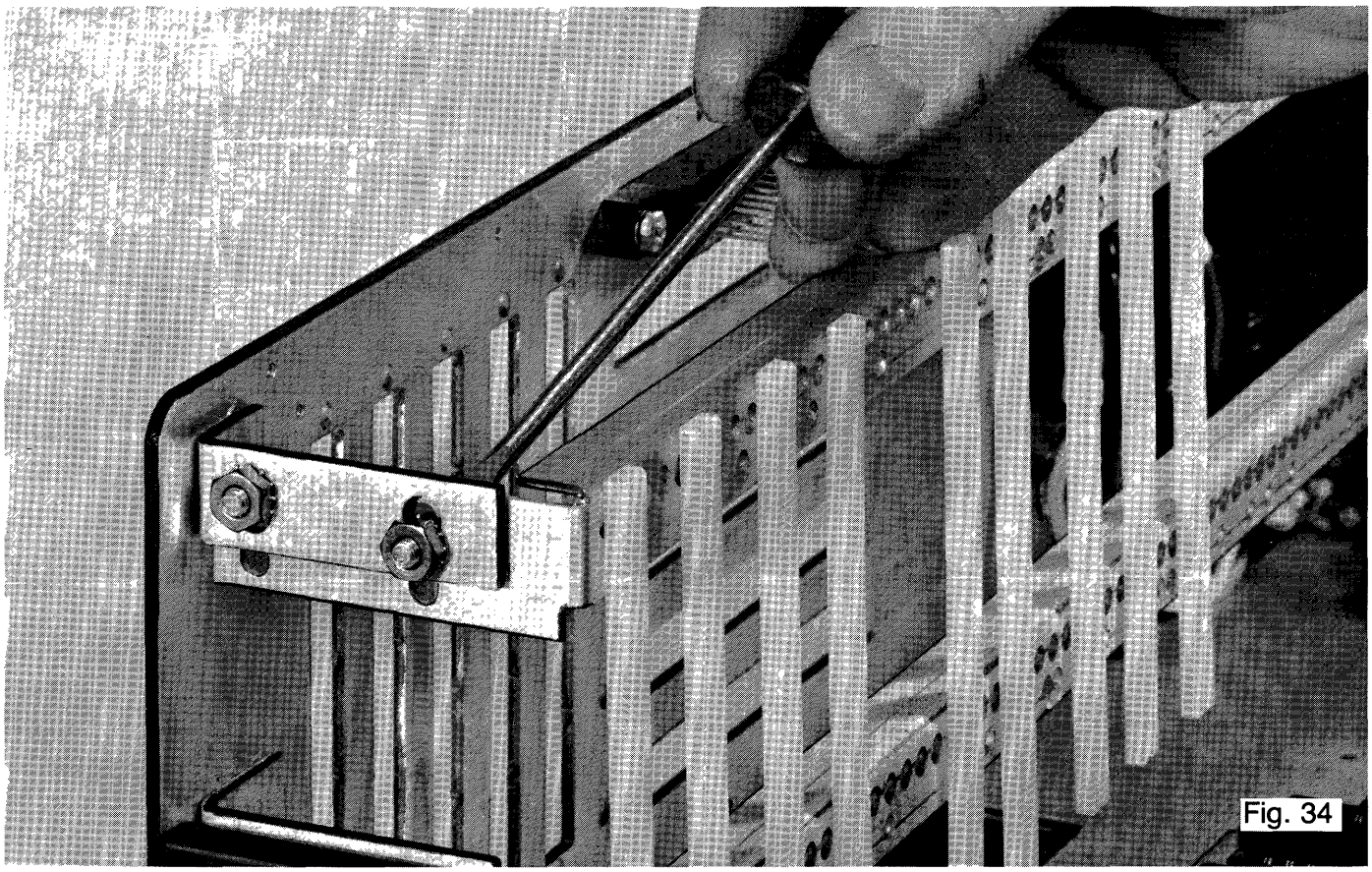

Fig. 34

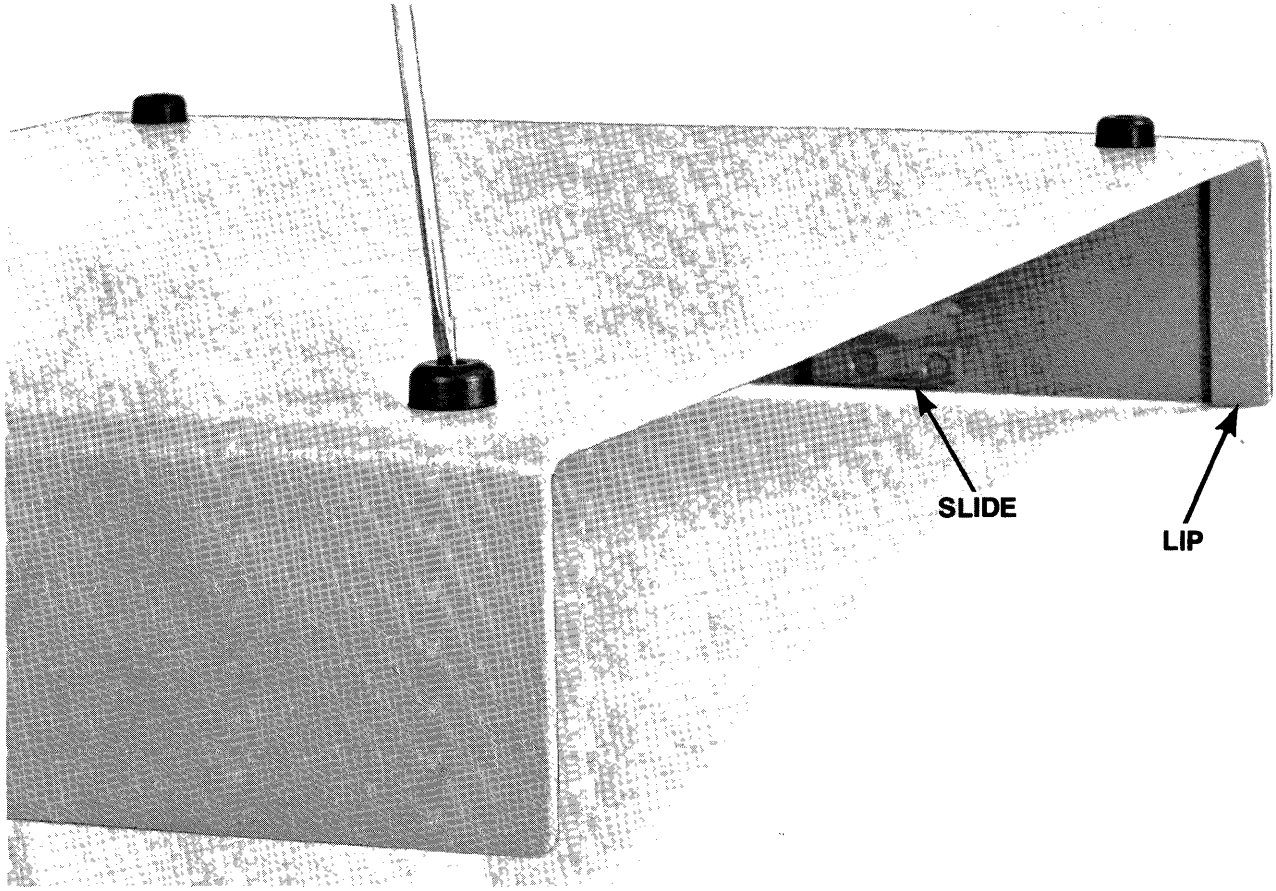

Fig. 35

the digital group
po box 6528 denver, colorado 80206 (303) 777-7133

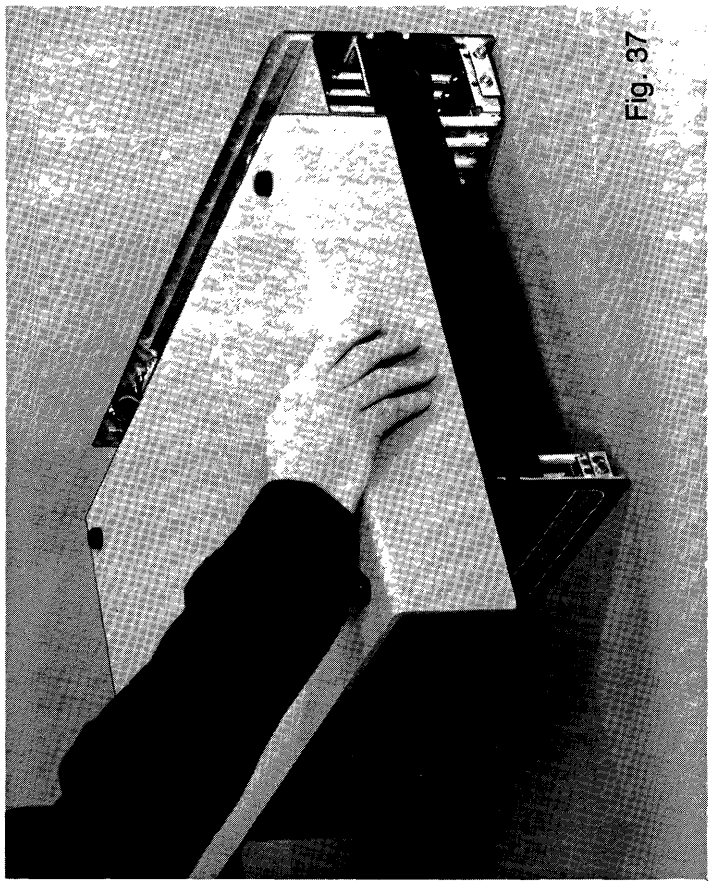

Fig. 37

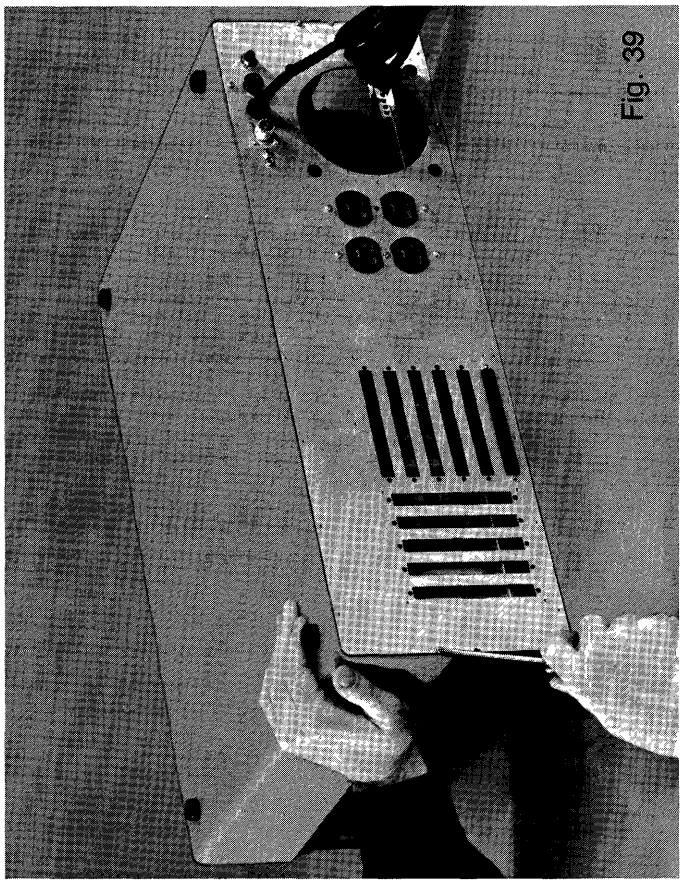

Fig. 39

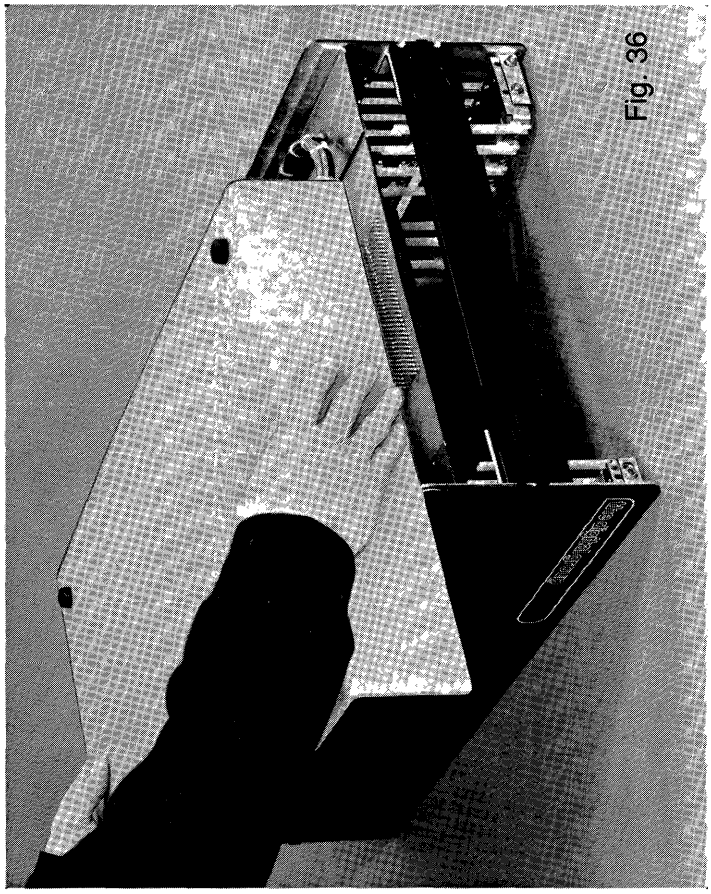

Fig. 36

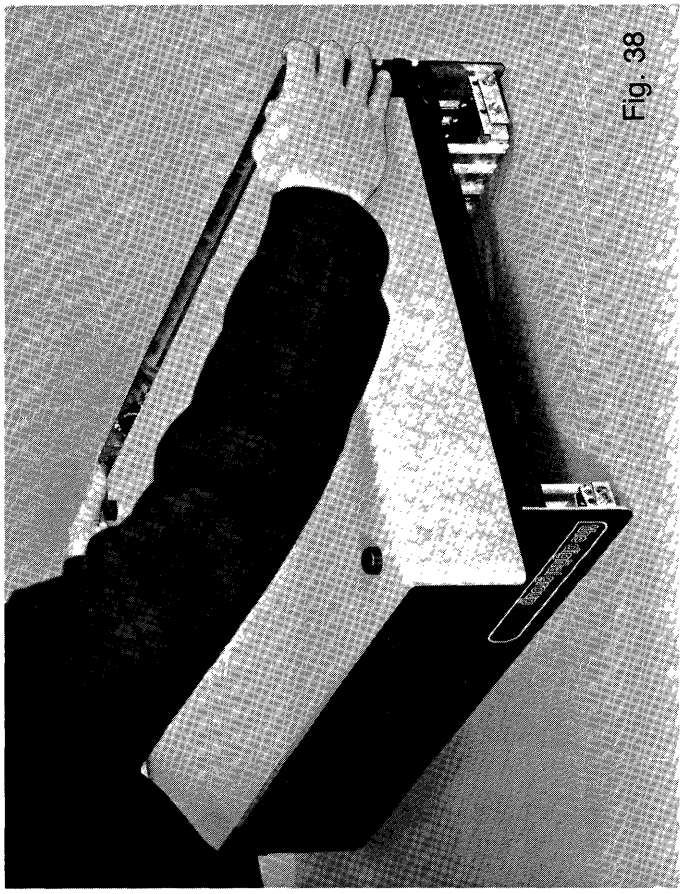

Fig. 38

the digital group

po box 6528 denver, colorado 80206 (303) 777-7133

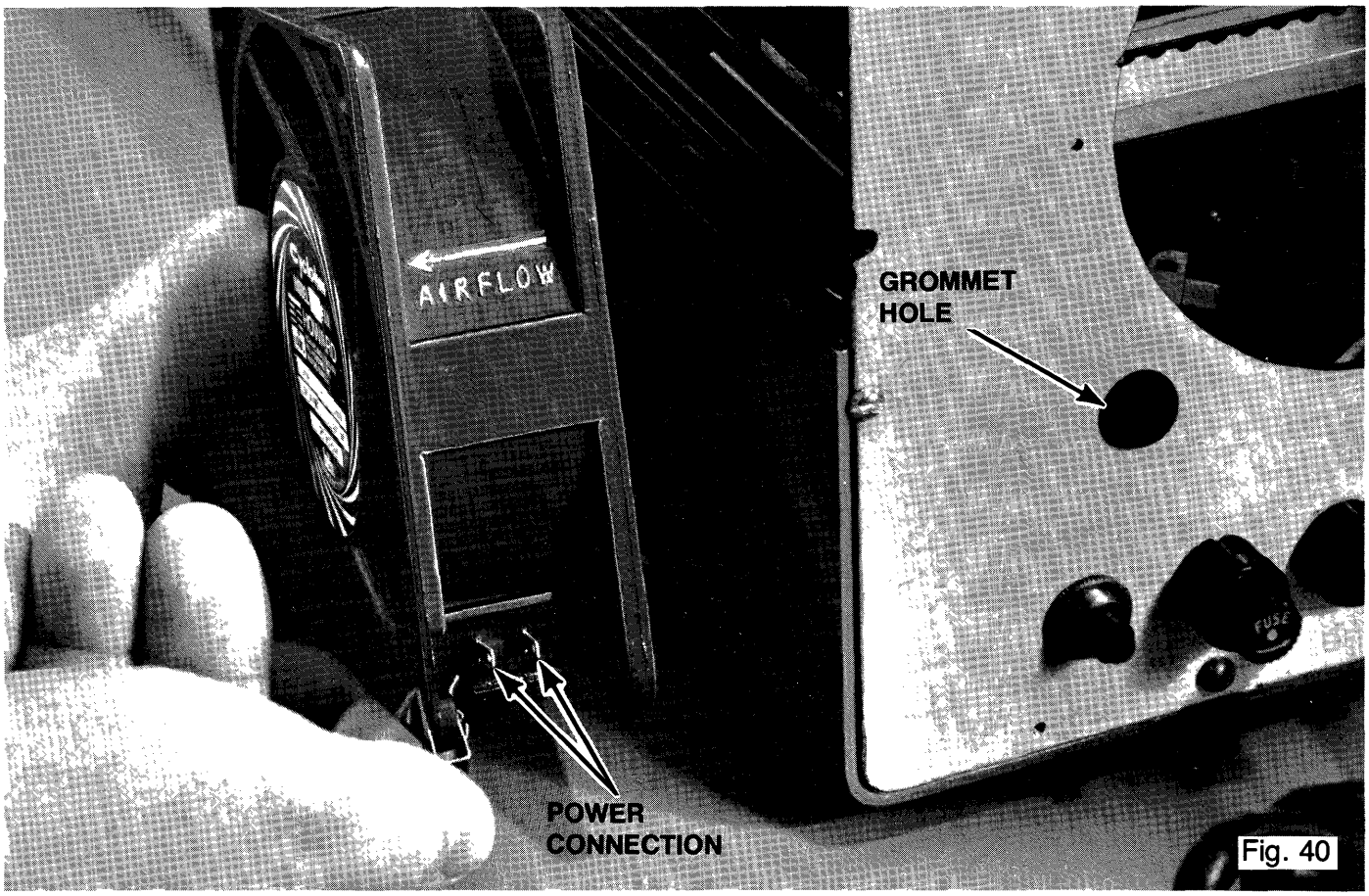

Fig. 40

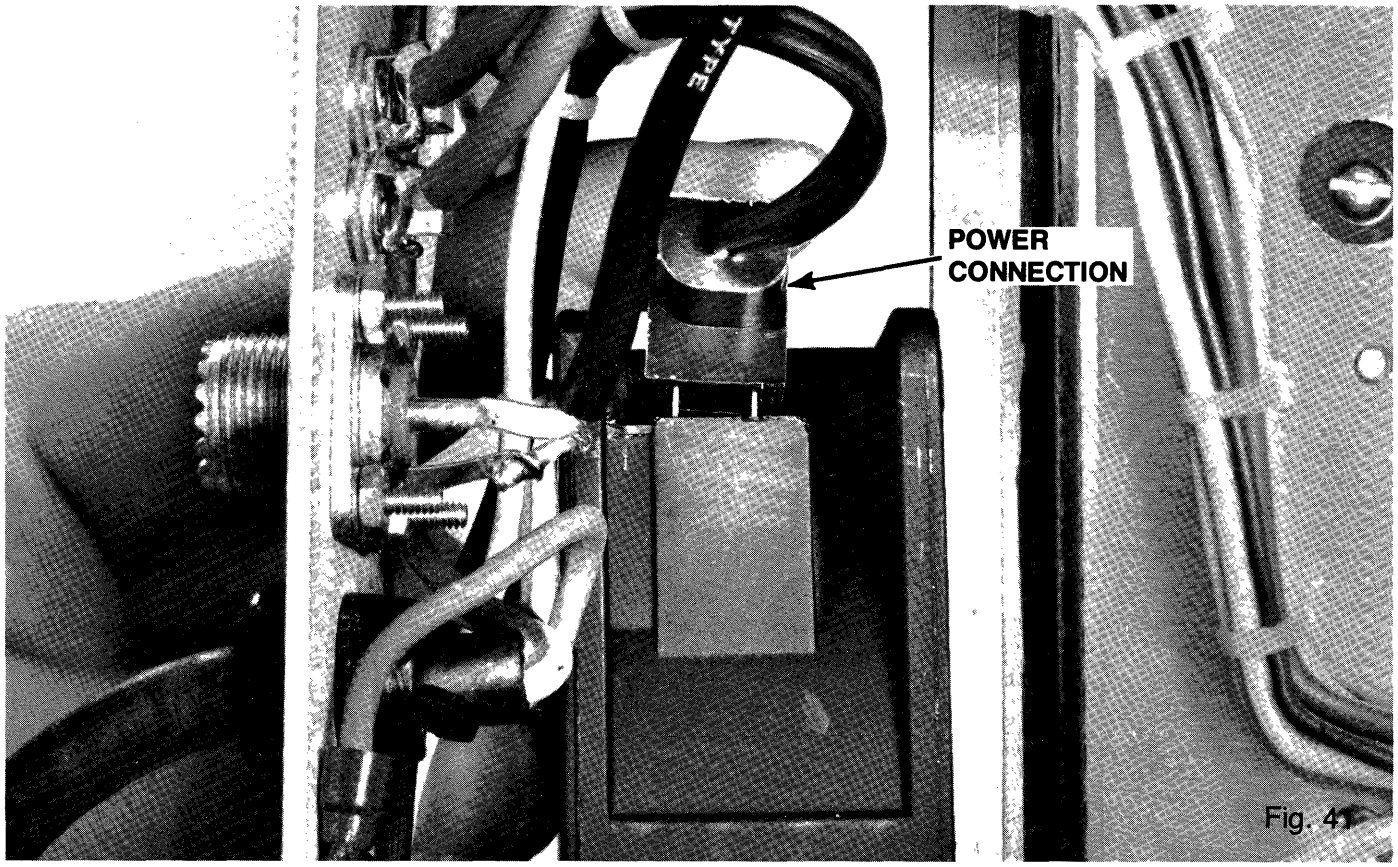

Fig. 41

the digital group
po box 6528 denver, colorado 80206 (303) 777-7133

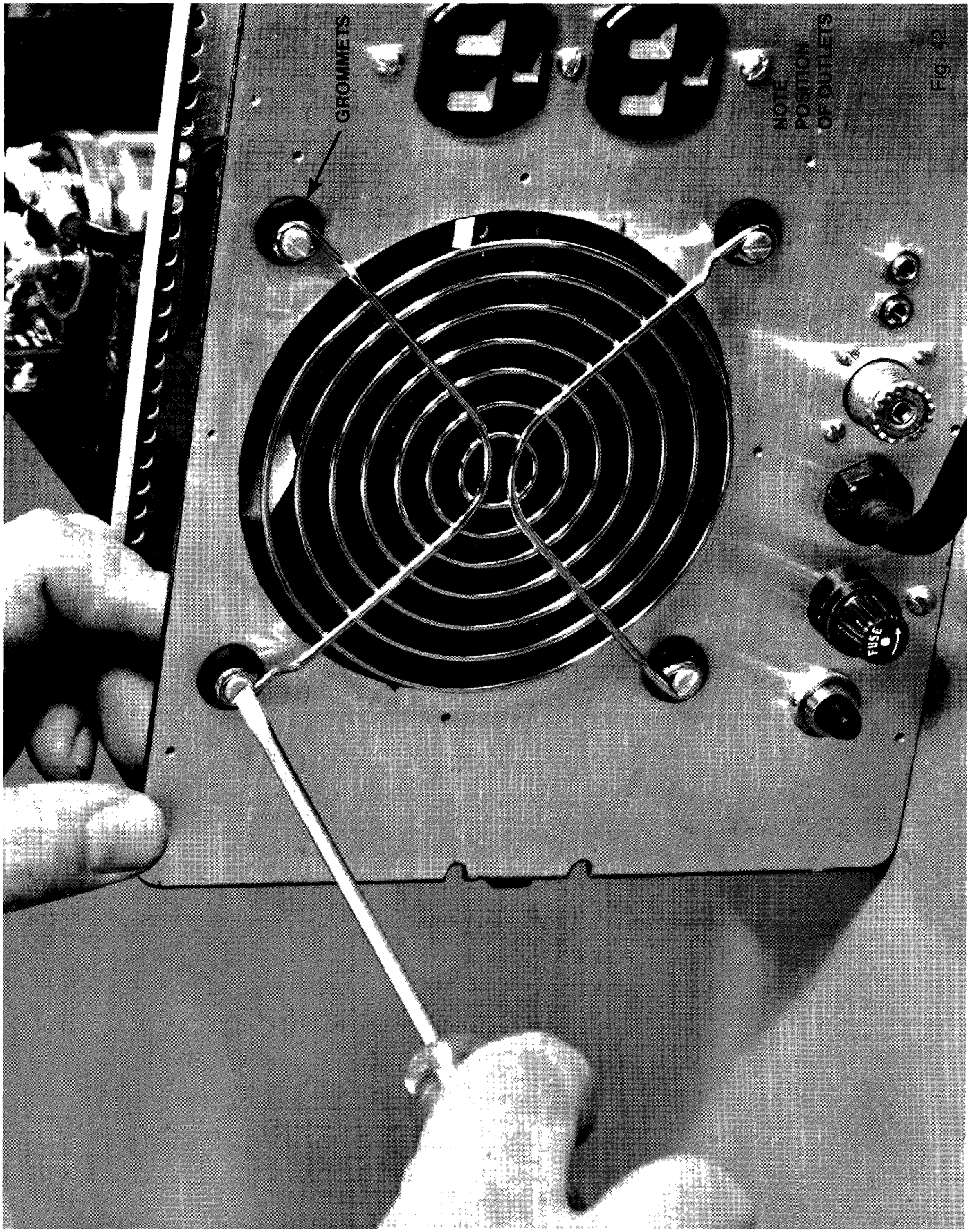

Fig. 42

the digital group
po box 6528 denver, colorado 80206 (303) 777-7133

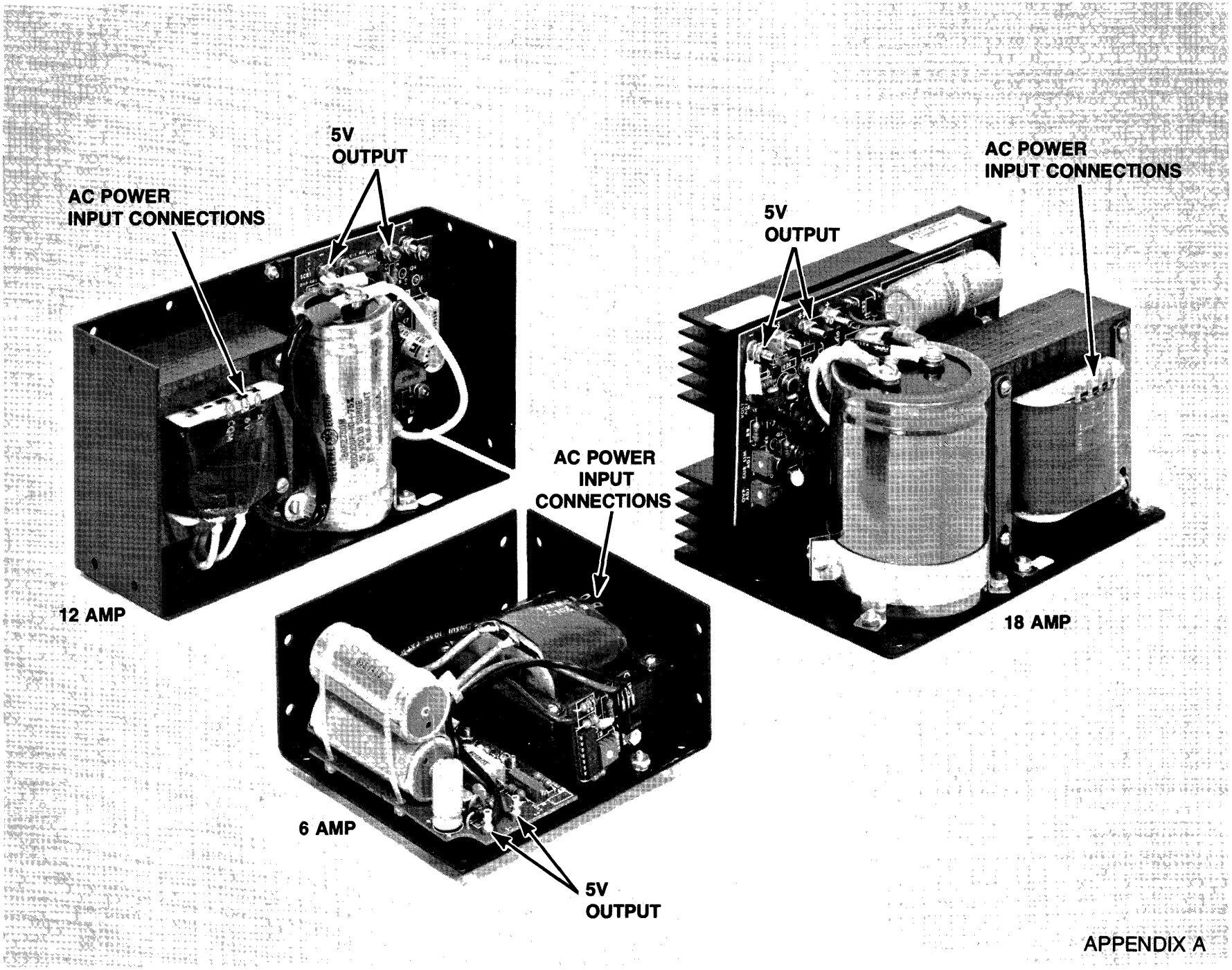

APPENDIX A

the digital group™
po box 6528 denver, colorado 80206 (303) 777-7133

Appendix A

It is suggested that you read a copy of "The Digital Group Low Current Power Supply" before proceeding with AC wiring.

Assembly of digital circuits involves little hazard; either during assembly or during operation. Voltages are low and chips are likely to be the only victim.

Assembling and using a power supply involves line voltage which can easily zap you. Thus a few precautions are in order.

Most important is to make sure your connections are secure. One should double wrap on tabs or posts that are to be soldered. Wires soldered into a board should be pushed in till the insulation is tight against the board and the wire should be soldered thoroughly. Strain relief should be used on all AC connectors to prevent a live wire from working loose.

Also make sure that wires have no chance of shorting and causing damage. All wires feeding through a metal wall should be protected by a rubber grommet. NOTHING should ever be installed so that it puts PRESSURE on a wire carrying power. Don't lash things up on a temporary basis and plan to fix it later. Many times it never gets fixed.

Items connected to AC power should always be fused to prevent catastrophe in the event of a short. ANY EXPOSED CONNECTIONS SHOULD BE INSULATED. All connections should be as snug as possible.

Use of a three grounding plug is strongly advised for all equipment. The third wire which is indicated by a green conductor should be attached to the case ground of your system. (The ground conductor may be indicated by some other method than the green conductor; possibly by a silver wire with two copper colored wires).

(Note: Cabineted system is designed to use 120v, 60Hz)

5V 6 Amp

Connect AC to two tabs on transformer. These are labelled 1 and 2. DC out is labelled + and − and is located at the edge of the board.

12 amp 5v supplies will be manufactured by either Power One Inc. or by Xentec Inc.

5v 12 amp Power One Model

Connect AC power to leads 1 and 4 on transformer. Connect a jumper between 4 and 2. Connect jumper between 3 and 1. (This configuration is for 120v operation which is what the system is designed to use)

5v 12 amp Xentec Model

Connect power to the leads on the transformer labelled COM and 5v. The 6v lead should not be used. DC output is from the bolts labelled + and −. Don't remove the bars between s+ and + or between s+ and −. These are for sensing purposes.

5v 18 amp

Connect AC power to leads 1 and 4 on the transformer. Connect a jumper between 3 and 4. Connect a jumper between 1 and 2. (If you plan to use 230v AC then connect power to leads 1 and 4. Jumper 2 and 3 together) DC output is from the bolts labelled + and −. Do not remove jumper bars. They are for sense purposes.

the digital group inc
po box 6528 denver, colorado 80206 (303) 777-7133

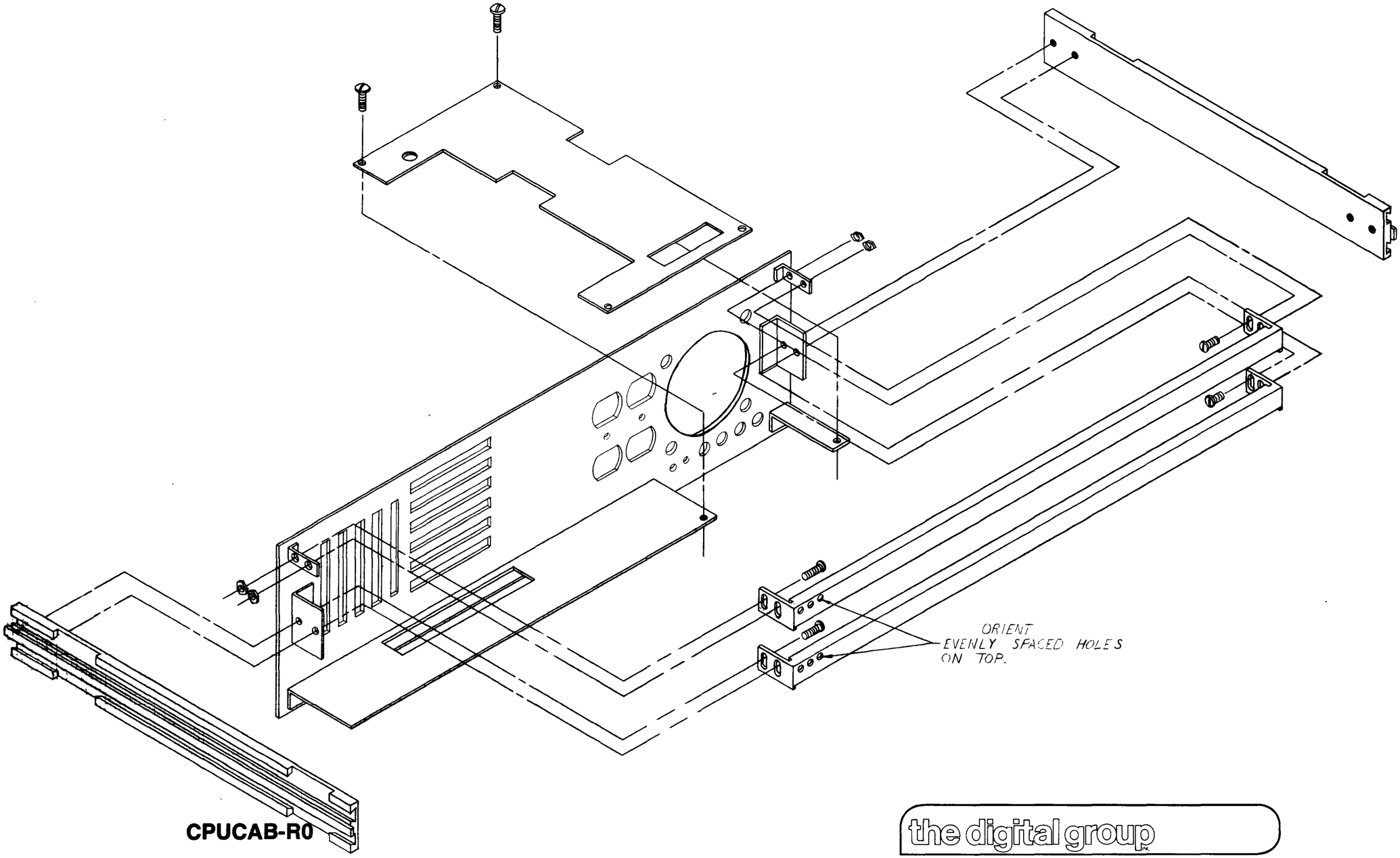

CPUCAB-R0

the digital group
po box 6528 denver, colorado 80206 (303) 777-7133

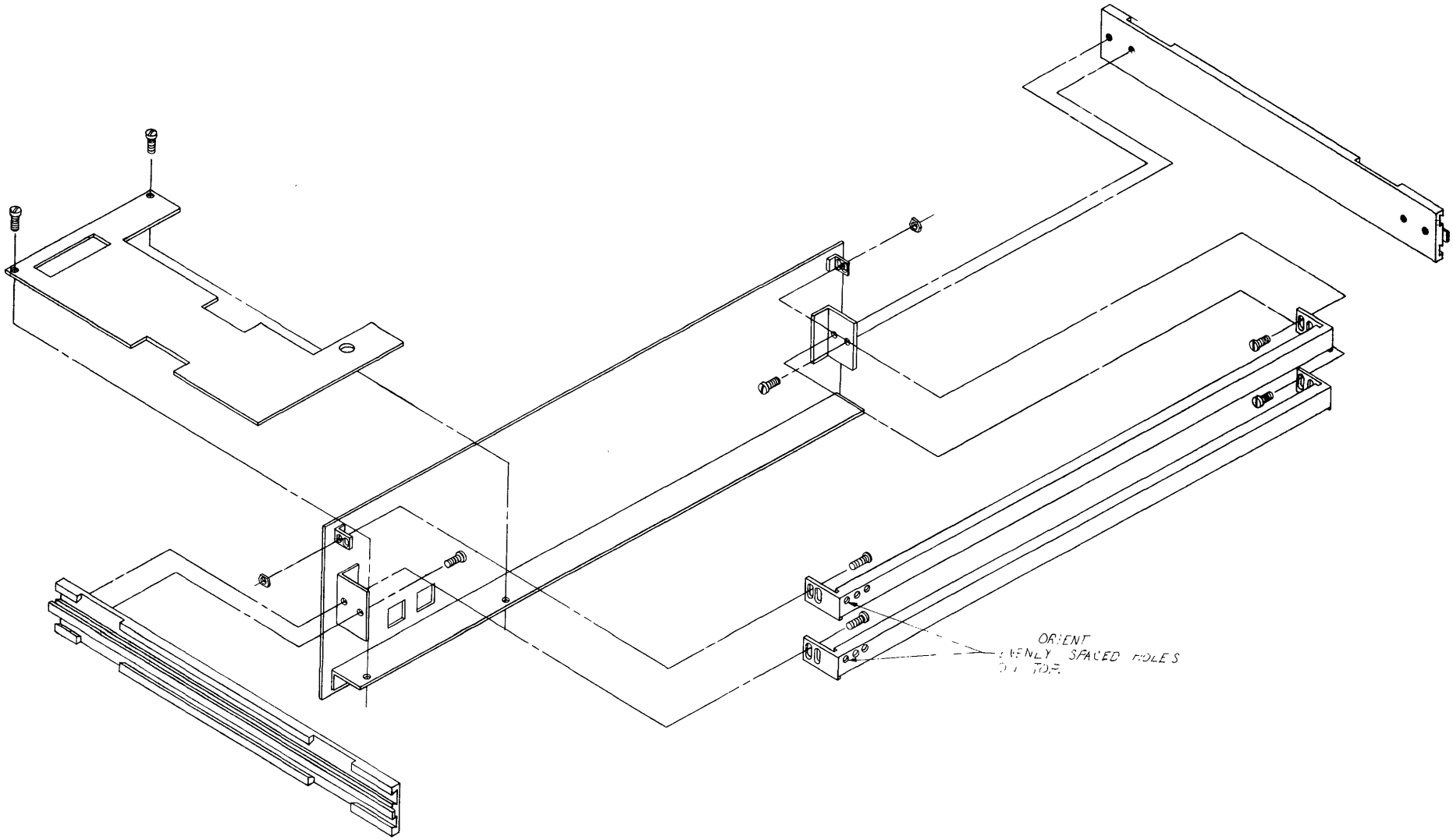

CPUCAB-R0

the digital group
po box 6528 denver, colorado 80206 (303) 777-7133

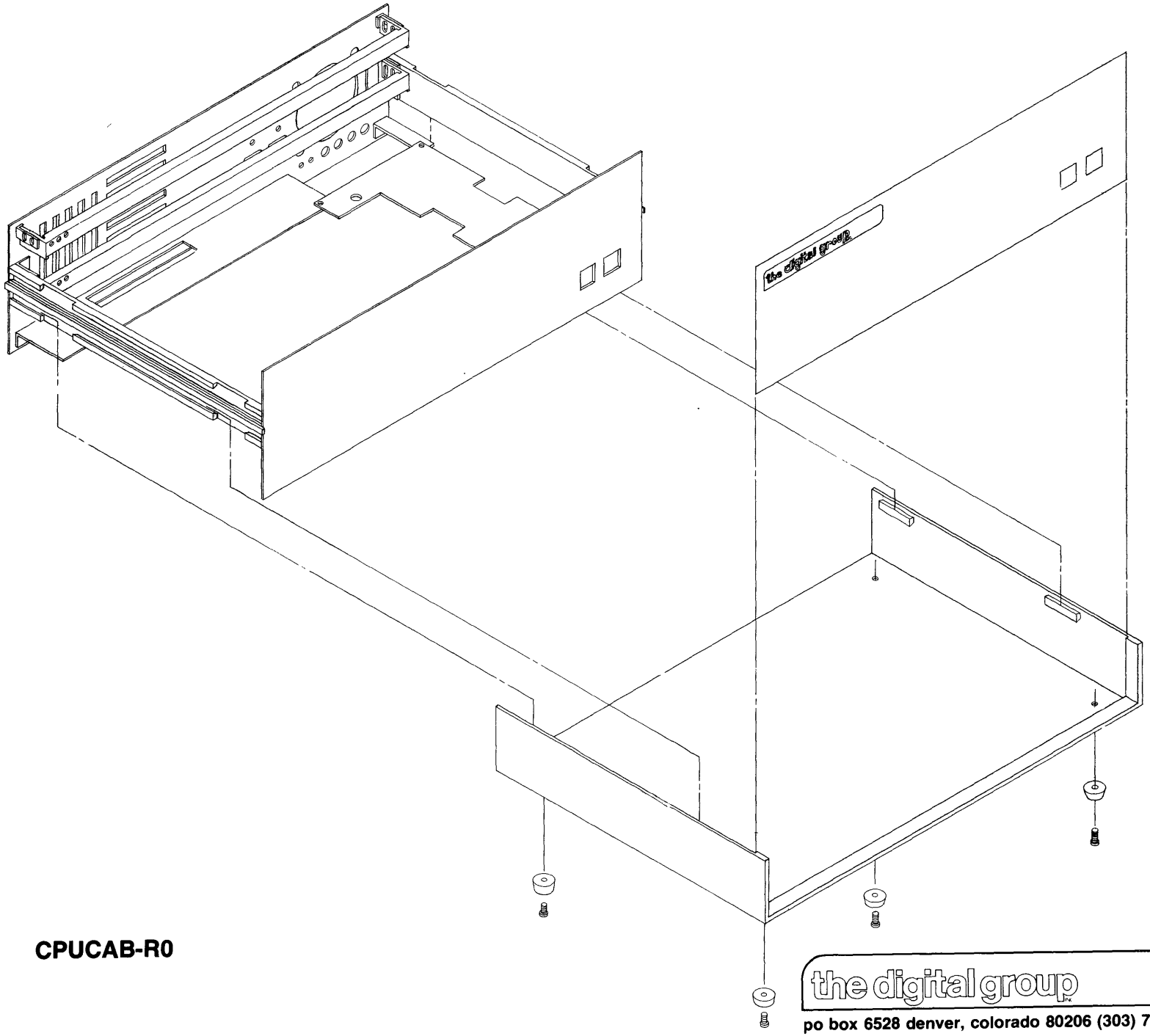

CPUCAB-R0

the digital group™
po box 6528 denver, colorado 80206 (303) 777-7133

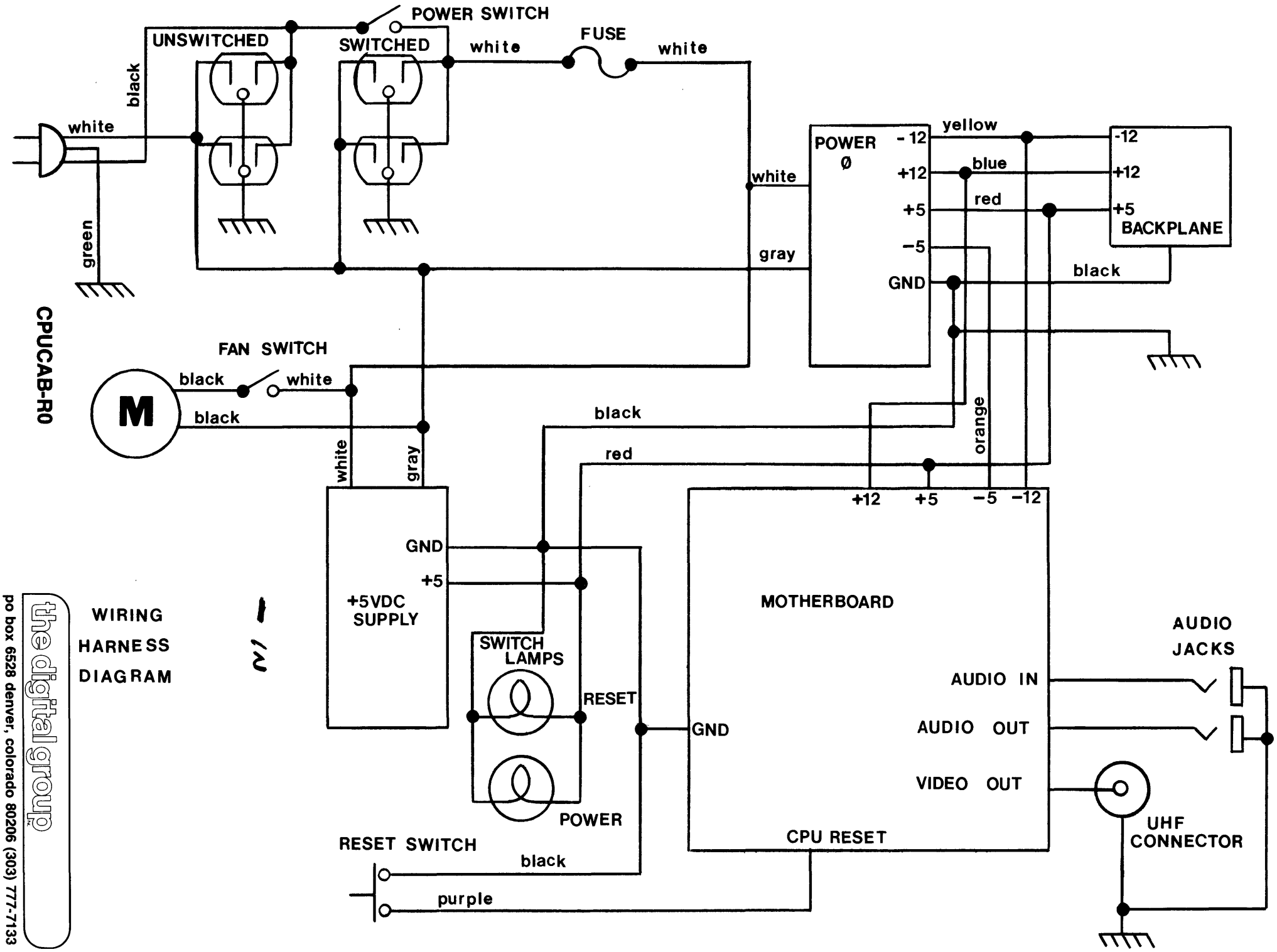
POWER SWITCH
UNSWITCHED
SWITCHED
FUSE
white
black
green
POWER Ø
-12
+12
+5
-5
GND
yellow
blue
red
orange
BACKPLANE
FAN SWITCH
M
+5VDC SUPPLY
SWITCH LAMPS
RESET
POWER
MOTHERBOARD
AUDIO IN
AUDIO OUT
VIDEO OUT
CPU RESET
AUDIO JACKS
UHF CONNECTOR
RESET SWITCH
purple
gray
CPUCAB-R0
WIRING HARNESS DIAGRAM
the digital group
po box 6528 denver, colorado 80206 (303) 777-7133

CPU Cabinet Front Card Guide Support Modification

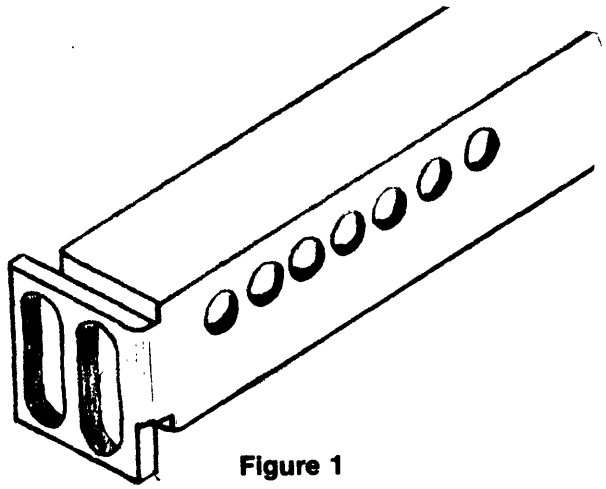

Figure 1

In order to make assembly of the front card guide support easier we have reversed the end tabs that connect the card guide support to the front panel. Figure 1 shows the old style rail. (See Figure 15 in the CPU cabinet documentation.)

Shown in Figure 2 is the new style card guide support and the upper mounting bracket that is attached to the front panel, the card guide support will connect to the upper mounting bracket using a screw inserted through the slot provided. A kep nut is supplied to eliminate the need for a separate lockwasher.

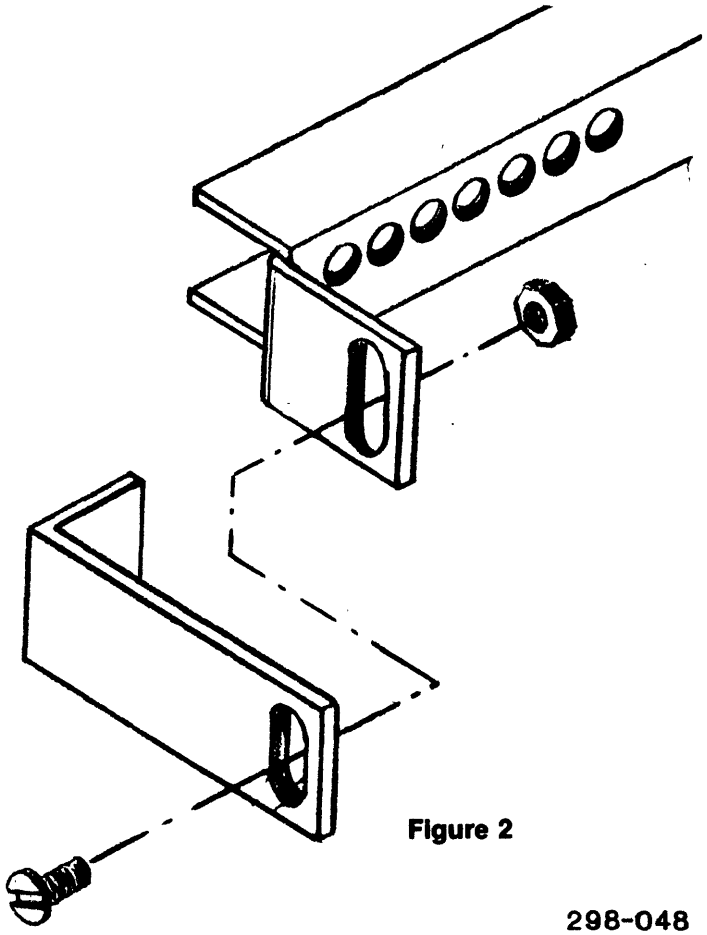

Figure 2

When installing the Front Lower Card Guide Support refer to Step 13 and Figure 10. Proceed as instructed with the exception that the *new* Card Guide Support will connect to the side rail bracket using the screw *farthest* from the front panel instead of the screw closest to the front panel.

298-048

the digital group
po box 6528 denver, colorado 80206 (303) 777-7133

Installation Instructions

Install the system PC boards as indicated on the motherboard photo. See Photo 1.

Make sure that each board is placed in the correct slot before applying power to your system. The component side of all boards should be facing the same direction as shown in the cabinet overview. See Photo 2.

Please check each card when installed in the motherboard to make sure that individual edge connector pins only make contact with matching board pins.

The labeled CPU backplane is shown in Photo 3. Plug in the appropriate cables for your system, using the orientation on each cable paddlecard. Again be sure that the paddlecard pins only make contact with the corresponding edge connector pins on the CPU backplane, and that the correct paddlecard is installed in each slot.

The power supply has not been installed in order to prevent damage to the CPU cabinet during shipping. Use the screws already mounted in the CPU cabinet baseplate to install the power supply. The Molex plug must be in place before applying power to the system. The plug is keyed so that it may not be accidentally reversed. See Photo 4.

If you have installed an 18 amp power supply and Power 0 in your Digital Group CPU cabinet, a full size memory expander board and a standard motherboard will not fit inside the cabinet. The memory expander board may be cut to fit but this must be done carefully with a band saw or precision cutting machine to avoid damaging the traces. It is recommended that system expansion beyond 26K be accomplished with a Digital Group 16K or 32K board.

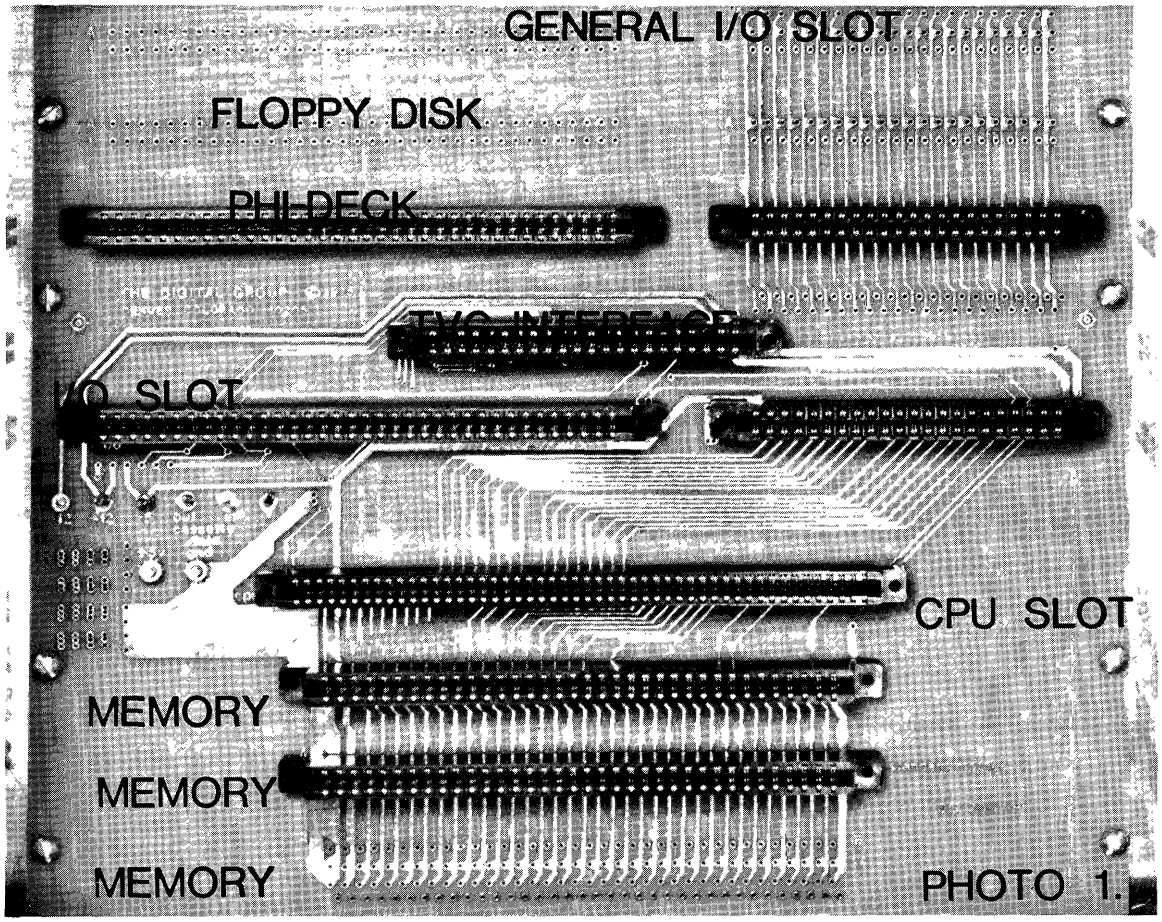

PHOTO 1.

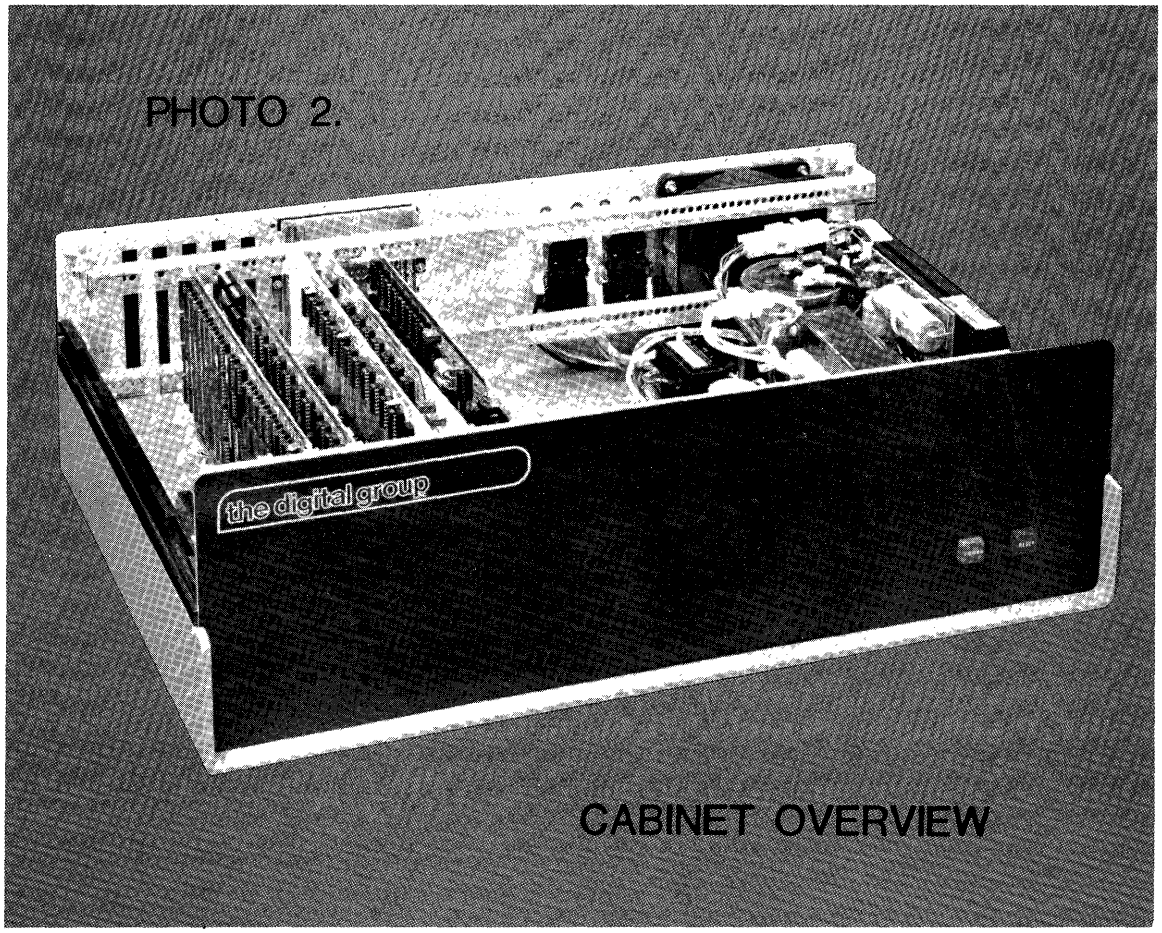

PHOTO 2.

CABINET OVERVIEW

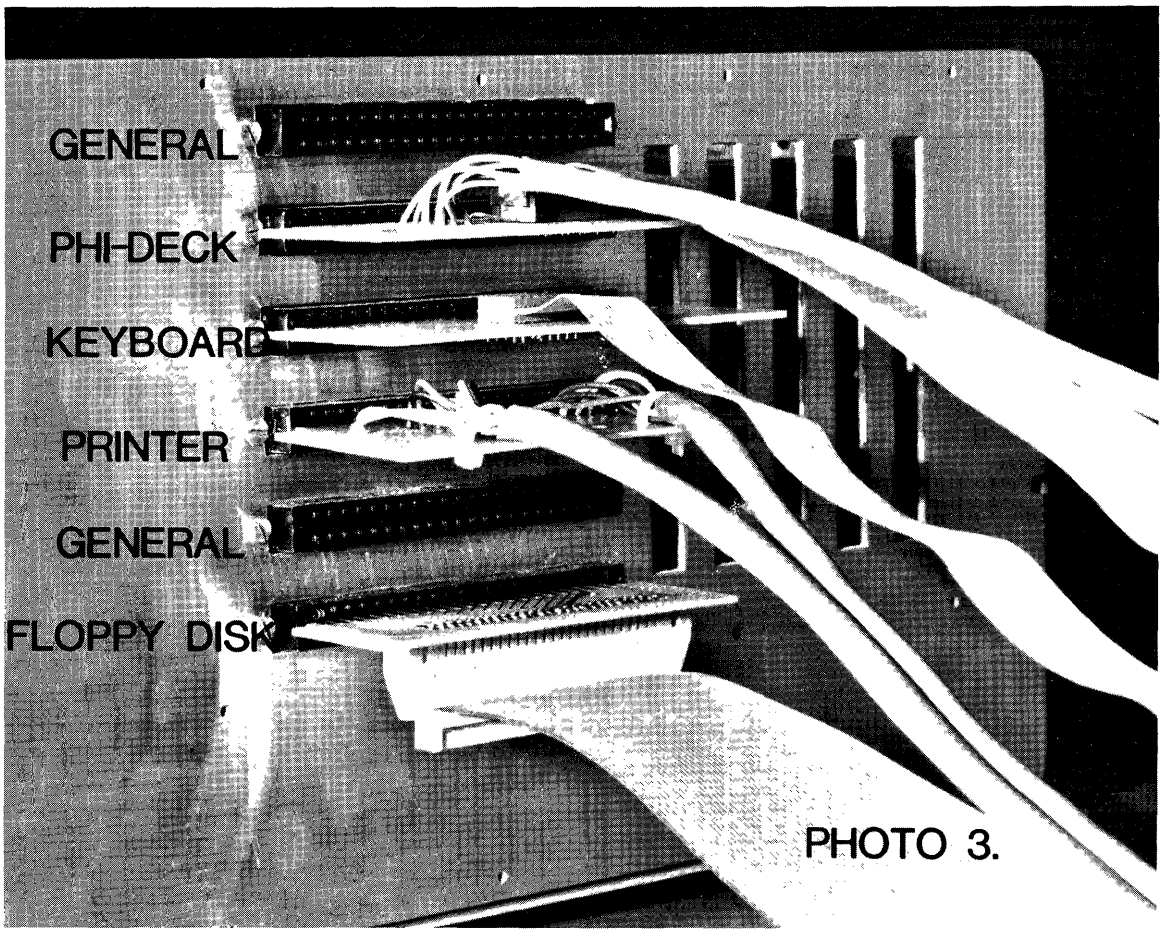

PHOTO 3.

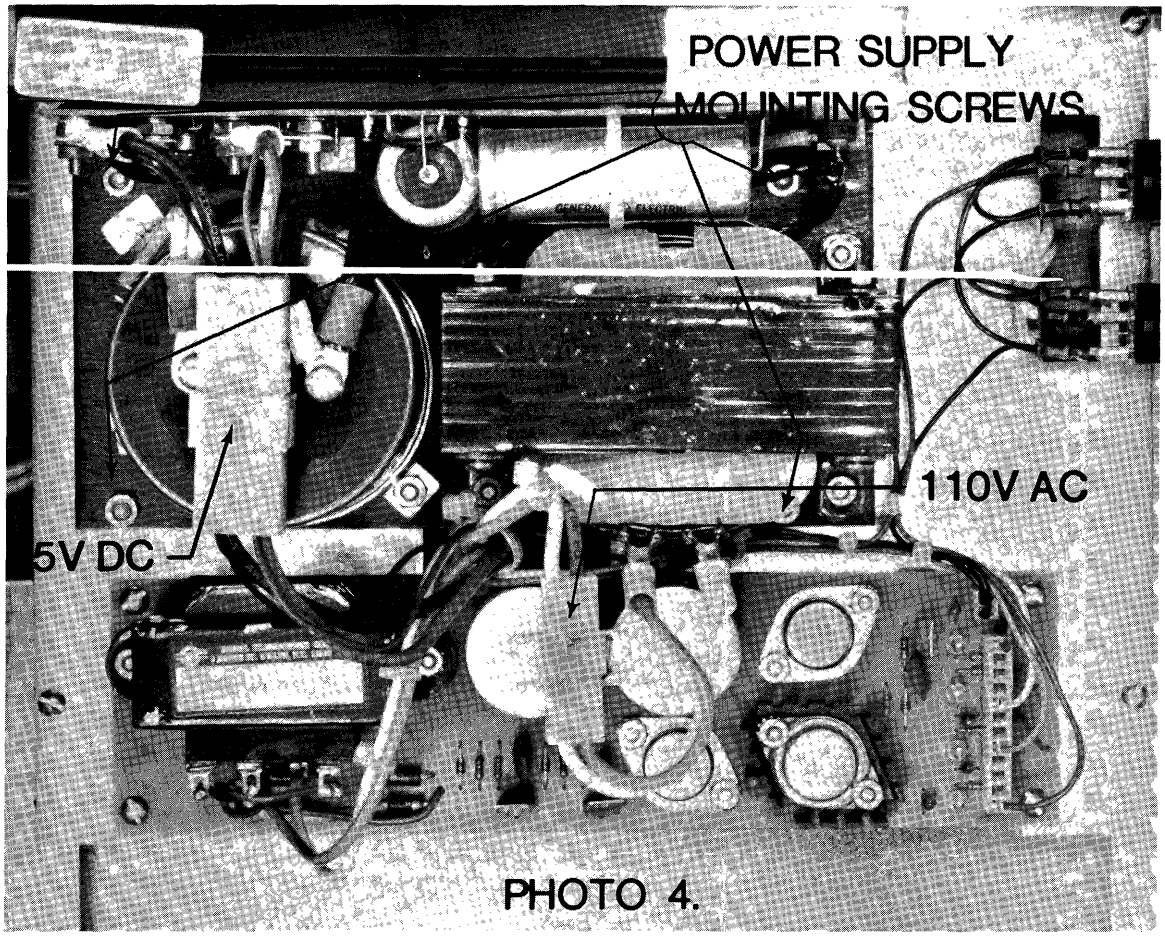

PHOTO 4.

PADDLE CARD CONNECTOR BLOCK
PINOUT (BACKPLANE)

GENERAL

	GND	+5V	+12V	LSB		output (even)				MSB	MSB			input (odd)			LSB	-12V	+5V	GND
1	●	●	●	●	●	●	●	●	●	●	●	●	●	●	●	●	●	●	●	●
1	●	●	●	●	●	●	●	●	●	●	●	●	●	●	●	●	●	●	●	●
	GND	+5V	-12V	LSB		input (even)				MSB	MSB			output (odd)			LSB	+12V	+5V	GND

22 / 22

ALL VIEWS FROM PINSIDE OF CONNECTOR

PHI-DECK

	GND	+5V	+12V	CAPSUPPLY	ALCAP	DECK 1 ENG1	SUP1	FWD1	REV1	ENGØ	DECK Ø SUPØ	FWDØ	REVØ		SHIELD	TAPE HEADS HDA3	HDA2	HDA1	HDAØ	-12V	+5V	GND
1	●	●	●	●	●	●	●	●	●	●	●	●	●	●	●	●	●	●	●	●	●	●
1	●	●	●	●	●	●	●	●	●	●	●	●	●	●	●	●	●	●	●	●	●	●
	GND	+5	-12V	ALLENGSWGND	ALLENGSW	REV3	FWD3	SUP3	ENG3	REV2	FWD2	SUP2	ENG2	Manstop	SHIELD	HDB3	HDB2	HDB1	HDBØ	+12V	+5V	GND
						DECK 3					DECK 2					TAPE HEADS						

22 / 22

KEYBOARD

	GND	+5V	+12V																-12V	+5V	GND
1	●	●	●	●	●	●	●	●	●	●	●	●	●	●	●	●	●	●	●	●	●	●
1	●	●	●	●	●	●	●	●	●	●	●	●	●	●	●	●	●	●	●	●	●	●
	GND	+5V	-12V	ASCII DATA BITS Ø	1	2	3	4	5	6	STROBE								+12V	+5V	GND

22 / 22

PRINTER

	GND	+5V	+12V	LSB		output				MSB	MSB			input			LSB	-12V	+5V	GND
1	●	●	●	●	●	●	●	●	●	●	●	●	●	●	●	●	●	●	●	●	●	●
1	●	●	●	●	●	●	●	●	●	●	●	●	●	●	●	●	●	●	●	●	●	●
	GND	+5V	-12V																+12V	+5V	GND

22 / 22

the digital group
po box 6528 denver, colorado 80206 (303) 777-7133

KEYBOARD CABINET ASSEMBLY

Due to various situations related to suppliers, hardware and wire colors, assembly instructions may vary without notice.

ASSEMBLY PROCEDURE

PARTS LIST

1 Keyboard cabinet shell (wrap around)
1 Keyboard insert (with or without cutout)
1 Bottom plate

SMALL PARTS BAG (one)

17 8-32 x 1/4 inch round head machine screws
6 8-32 x 3/8 inch flat head screws
3 .150 inch hex aluminum spacers
3 1.250 inch hex aluminum threaded spacers
1 flat cable clamp
4 rubber furniture guards
3 4-40 x 3/8 inch screws
3 4-40 x 1/2 screws
3 4-40 hex nuts & washers

SEE DRAWING AND PHOTO BEFORE PROCEEDING

1. ☐ Install three 1.250 inch threaded aluminum spacers on the three rear holes of the keyboard using three 4-40 x 3/8 inch screws. Be careful not to tighten too much or the board will crack.

2. ☐ Turn the keyboard upside down and place the bottom plate over the aluminum spacers. Install the bottom plate using three 8-32 x 1/4 inch screws through the bottom plate and into the 1.250 spacers. DO NOT TIGHTEN THE SCREWS.

3. ☐ Install three .150 inch aluminum spacers on the front three holes of the keyboard between the keyboard and bottom plate using three 4-40 x 1/2 inch screws and hex nuts. Do not tighten the nuts. The easiest way to do this is to place the plate up, facing you. Slip the spacer between the keyboard and plate, then place the screw through the keyboard, spacer and bottom plate. Then fasten the nut to the screw.

4. ☐ Insert the keyboard insert into the wrap-a-round shell, using three 8-32 x 3/8 flat head screws. To do this, hold the shell with the lip up, facing you. Then place the keyboard insert into the shell, widest edge first, by coming up from the bottom of the shell. Slide the keyboard insert toward the front of the shell, till it is stopped by the two mounting tabs of the shell. Then rotate the keyboard insert around until it fits into the shell and is stopped by the lip of the shell. Then fasten with the 8-32 screws.

5. ☐ Install the keyboard wiring cable to the keyboard plug. SEE EXPLODED DRAWING INSET.

6. ☐ Install the flat cable clamp inside the shell under the oblong hole with the flat keyboard cable under it using two 8-32 x 1/4 inch screws. Do not tighten screws.

7. ☐ Insert the keyboard and bottom plate into the keyboard insert. Use eight 8-32 x 1/4 inch screws to attach the bottom plate to the keyboard insert and three 8-32 x 3/8 inch flat head screws to attach the bottom plate to the shell.

8. ☐ Adjust the keyboard in the cutout for proper clearance and tighten the spacer screws and nuts.

9. ☐ Install four rubber furniture guards on the bottom plate using four 8-32 x 1/4 inch screws.

10. ☐ Pull the connecting cable out of the oblong cutout in the shell and tighten the cable clamp screws. Be sure the cable is not crimped or crushed.

the digital group inc
po box 6528 denver, colorado 80206 (303) 777-7133

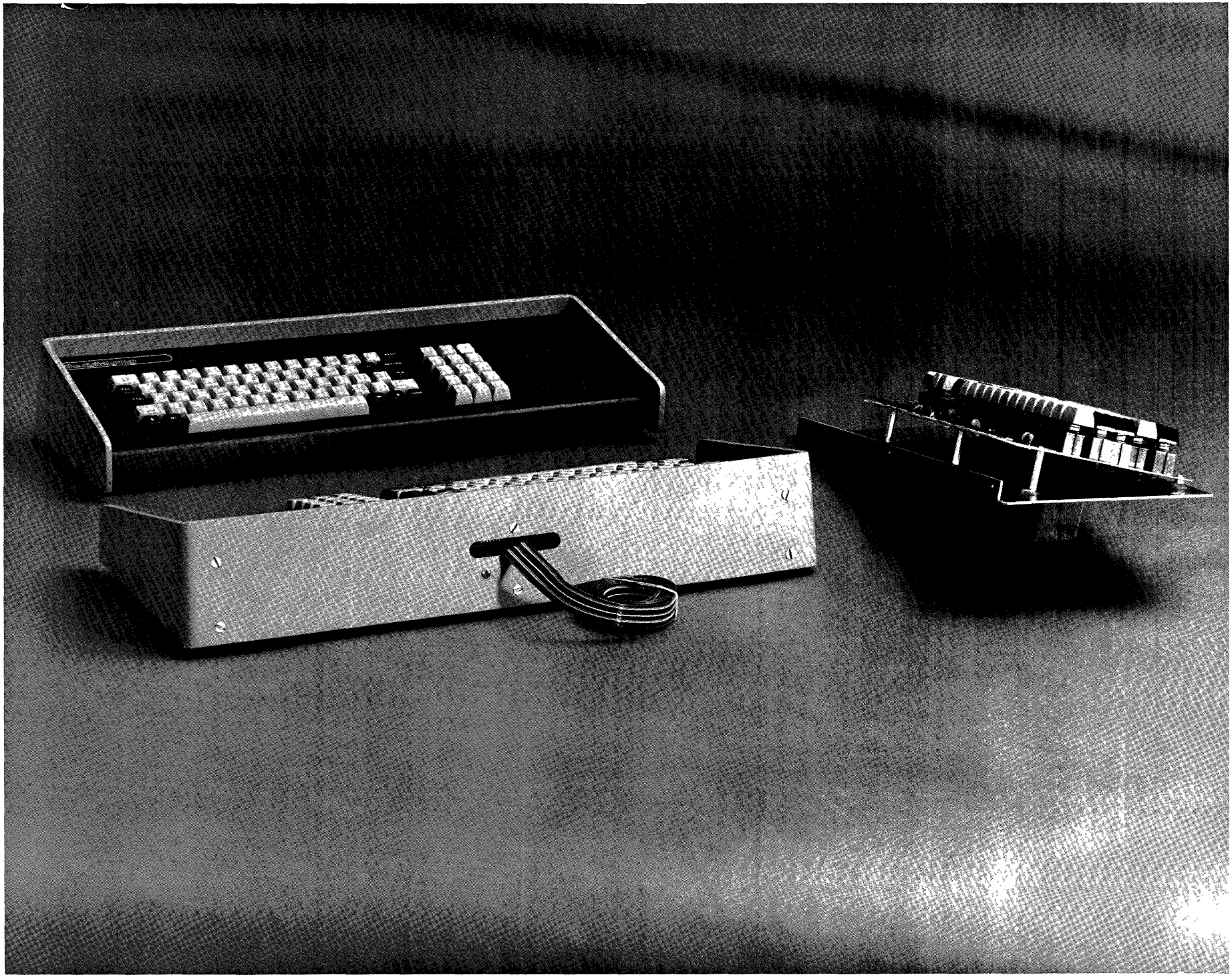

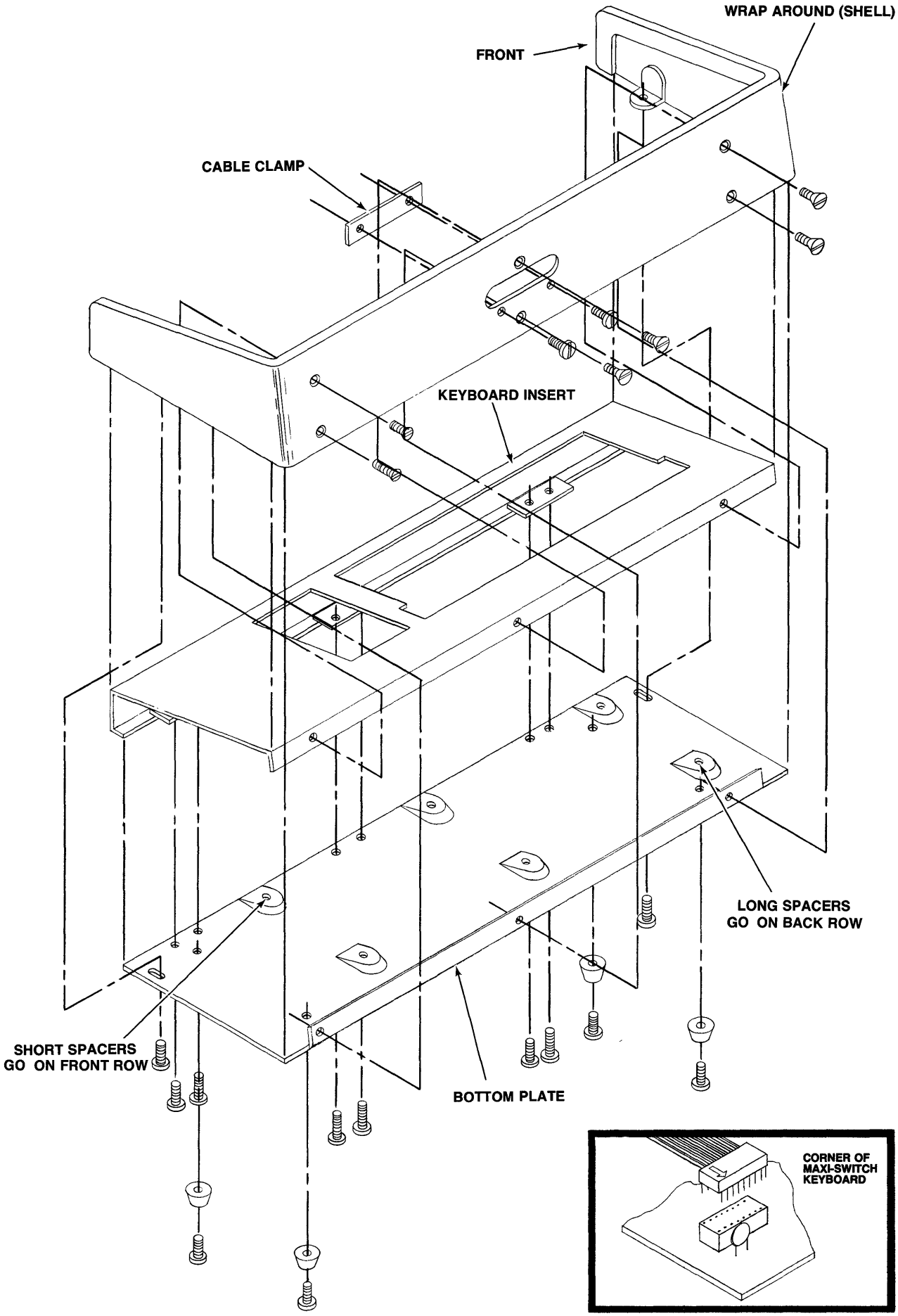
WRAP AROUND (SHELL)
FRONT
CABLE CLAMP
KEYBOARD INSERT
LONG SPACERS
GO ON BACK ROW
SHORT SPACERS
GO ON FRONT ROW
BOTTOM PLATE
CORNER OF
MAXI-SWITCH
KEYBOARD

Instructions for Interfacing ASCII Keyboard

The keyboard cable that is supplied with your keyboard is different than that originally specified. The 16-pin keyboard cable plugs directly into the 18-pin keyboard socket with the number 1 position of the cable plug (red wire) matching the number 1 position of the keyboard socket. With the plug installed in the keyboard socket, pins 9 and 10 of the socket are not connected.

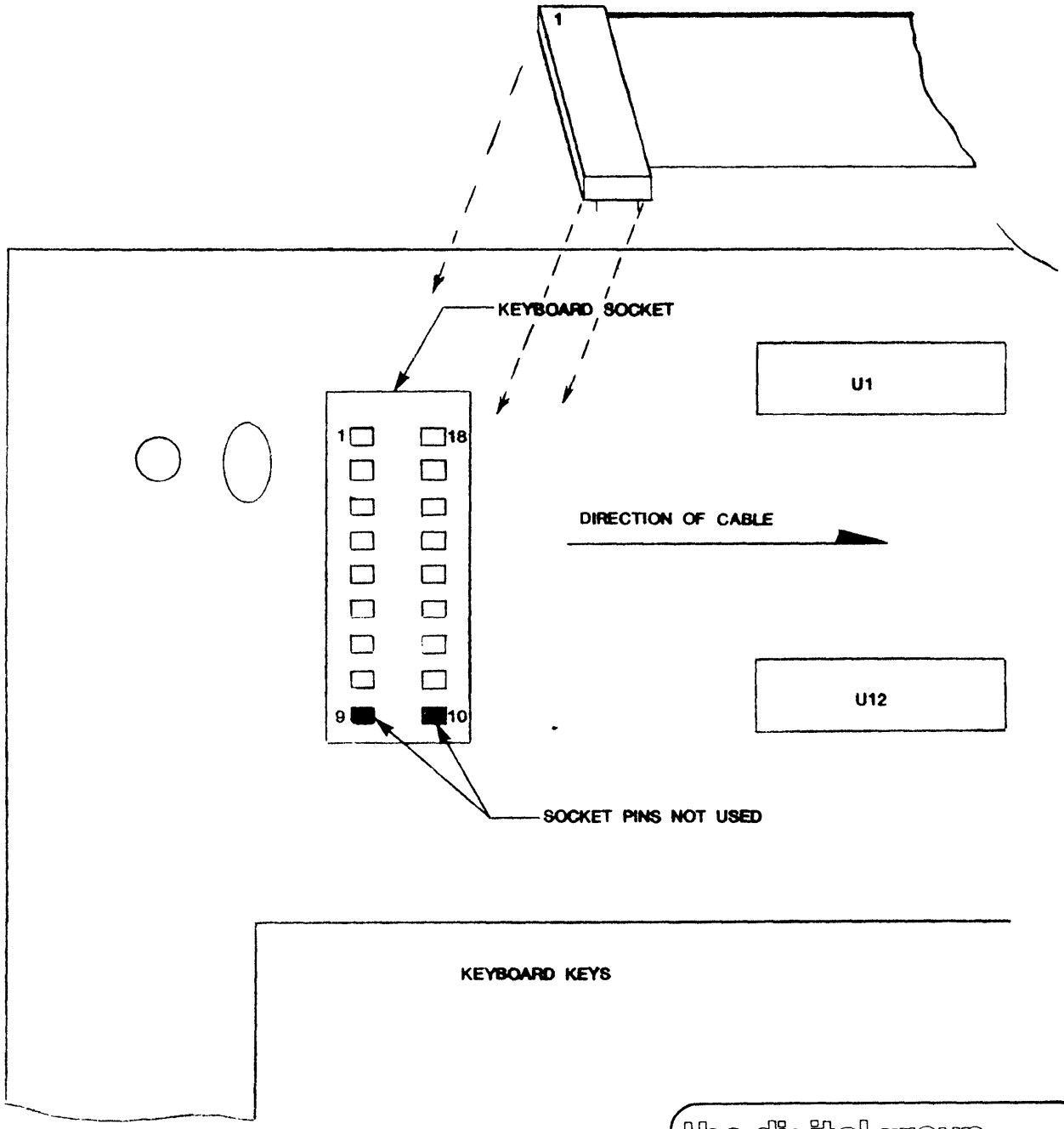

the digital group
po box 6528 denver, colorado 80206 (303) 777-7133

Changes to Keyboard Cabinet Assembly Instructions

A substition of 3 1.250 inch nonthreaded spacers for the 3 1.250 inch hex aluminum threaded spacers originally provided, has caused a change in the parts list and assembly instructions.

The parts list for the SMALL PARTS BAG now reads as follows:

14	8-32 x 1/4 inch round head machine screws
6	8-32 x 3/8 inch flat head screws
3	4-40 x 1/2 inch screws
3	4-40 x 1 1/2 inch screws
3	.150 inch spacers
3	1.250 inch spacers
1	flat cable clamp
4	rubber furniture guards
6	4-40 hex nuts
6	4-40 flat washers

Steps 1 and 2 of the assembly procedure should now read:

1. Install three 1.250 inch spacers on the three rear holes of the bottom plate using three 4-40 x 1 1/2 inch screws and flat washers.

2. Place the keyboard over the spacers. Install the keyboard on the screw and spacer assembly with 3 4-40 hex nuts.
   DO NOT TIGHTEN THE NUTS
   (refer to figure below)

The rest of the assembly procedure is correct.

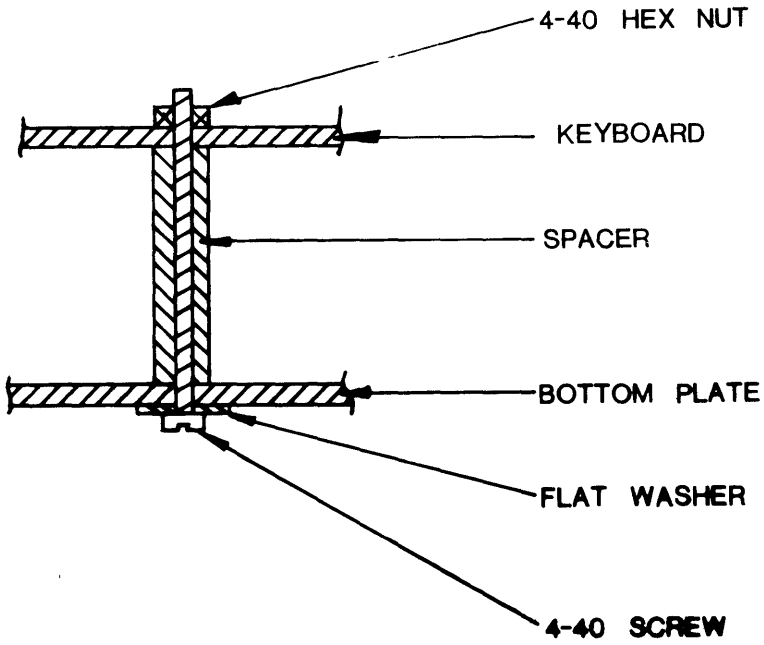

the digital group inc
po box 6528 denver, colorado 80206 (303)861-1686

INTERFACING INSTRUCTIONS
FOR ASCII KEYBOARD

The TTL level signals and power connections for the keyboard you have received are acessed thru the 18 pin connector located at the upper-left hand corner of the P.C. board.

Pin 1 is indicated by a dot and is located at upper left of 18 pin socket.

The pinout of the socket is as follows:

PIN #	DESCRIPTION	
1	+5 Volt power	
8	Ground (common)	
18	Strobe (pulse)	MSB
17	DATA	MSB-1
16	DATA	MSB-2
15	DATA	MSB-3
14	DATA	LSB+3
13	DATA	LSB+2
12	DATA	LSB+1
11	DATA	LSB
6	Strobe (level)	
5	SEND KEY (normally low)	

Note that there is a one mfd capacitor across pins 18 and 6 (positive side toward pin 6) and a resistor between pins 8 and 18. These two components are used to derive the pulse at pin 18. (R=470 ohm)

The difference between pins 6 and 18 are that while both go high during keypress, pin 6 stays high until the key is released while 18 goes high momentarily.

Pin 5 is normally low until the send key is pressed at which time it goes high until the key is released. With an inverter this pin could be used as a reset from the keyboard.

We suggest using pin 18 for the strobe connection but pin 6 will work also

the digital group INC
po box 6528 denver, colorado 80206 (303) 777-7133

A brightly colored connector cable has been included with your keyboard. At one end of the cable the wires are terminated in the DIP connector which plugs in your keyboard. There is a marking on the connector which indicates where pin #1 is located. On the keyboard itself this is indicated by a dot next to pin #1.

On the other end of the cable a variety of connectors can be attached. We often use molex connectors on our systems. (not included)

Beginning with the brown wire on the edge of the cable the numbering goes as follows.....

Brown	01	(PIN #1)
Red	18	
Orange	02	
Yellow	17	
Green	03	
Blue	16	
Purple	04	
Gray	15	
White	05	
Black	14	
Brown	06	
Red	13	
Orange	07	
Yellow	12	
Green	08	
Blue	11	
Purple	09	
Gray	10	

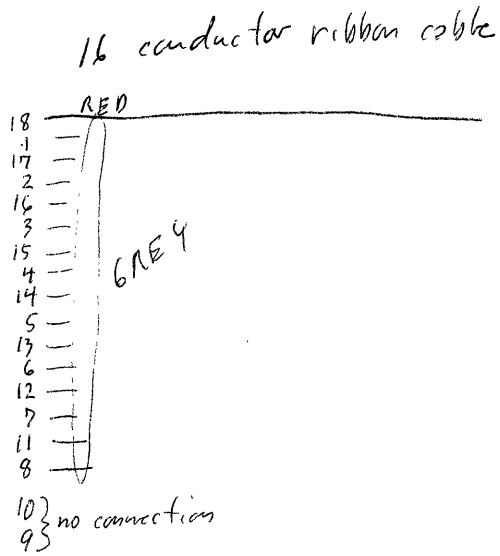

Your keyboard has been shipped without the 1 mfd capacitor or 470 ohm resistor being installed. They are enclosed if you wish to add them. Pin 18 won't work as a strobe if you don't add these parts. However, pin 6 will work without addition of the parts.

We suggest you add the parts on and use pin 18 as the strobe output.

Make sure your installed capacitor and resistor don't short to other pins, etc.

Hook capacitor between pin 18 and pin 6 with positive side to pin 6. (Positive side indicated by vertical stripe)
Hook resistor (470 ohm) between pins 18 and 8.

PART NO. 262033		ISSUE 1	
ECO. NO.	REVISION	DATE	AUTH.
R00198	RELEASED	11/76	

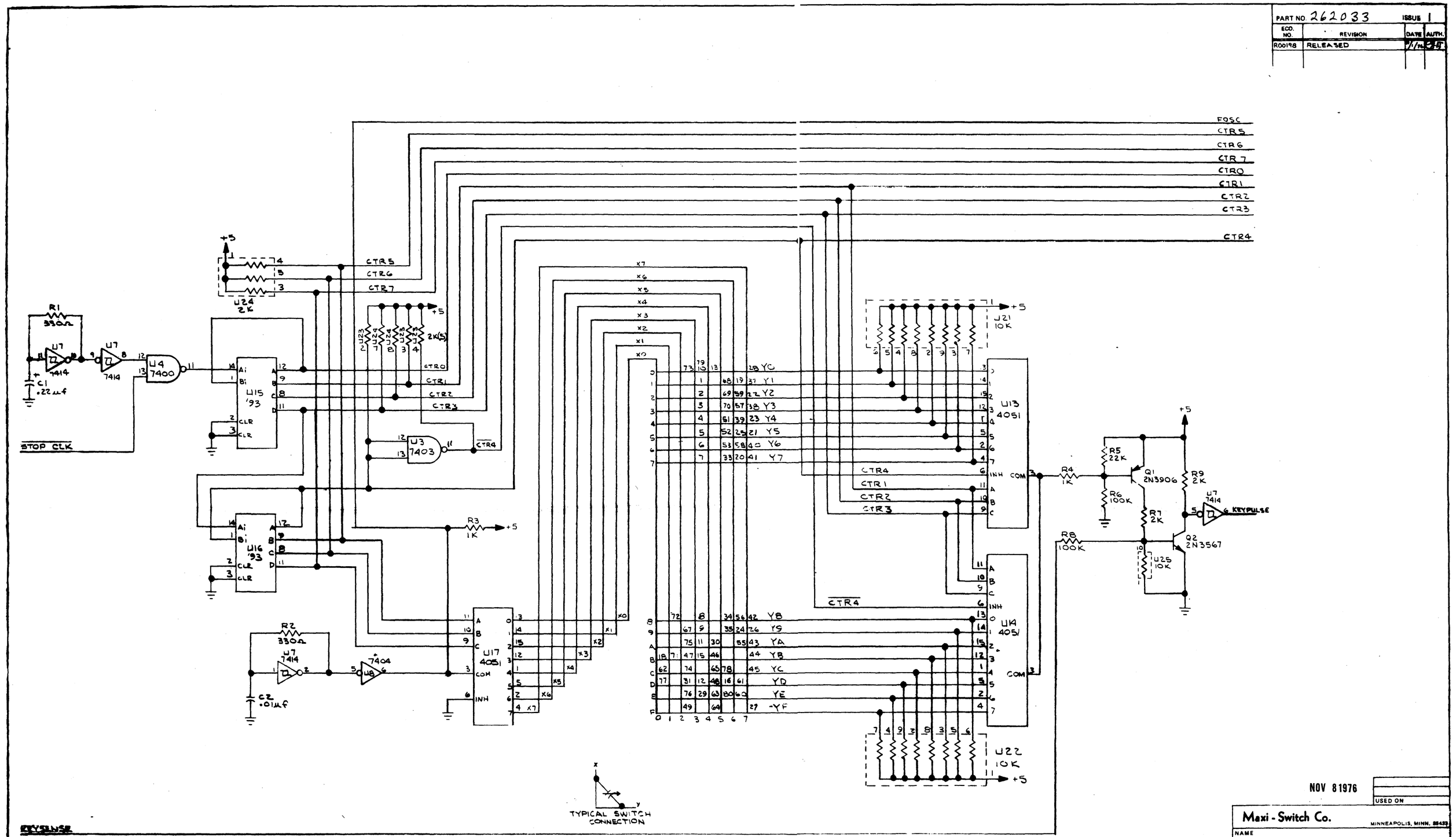

KEYSENSE

NOV 8 1976

USED ON

Maxi - Switch Co. MINNEAPOLIS, MINN. 55439

NAME

MATERIAL

FINISH

SCALE NONE

DRAWN BY: RADIL DATE JULY 8, 1976

APPR. BY: E. J. Timmerek DATE 11-1-76

SHEET 1 OF 2 PART NO. 262033 ISSUE 1

TOLERANCE UNLESS OTHERWISE SPECIFIED
DECIMAL DIMENSIONS
2 PLACE ± .010
3 PLACE ± .005
FRACTIONAL DIMENSIONS
± .015

PART NO. 262033			ISSUE 1
ECO. NO.	REVISION	DATE	AUTH
R00198	RELEASE	11/1/76	

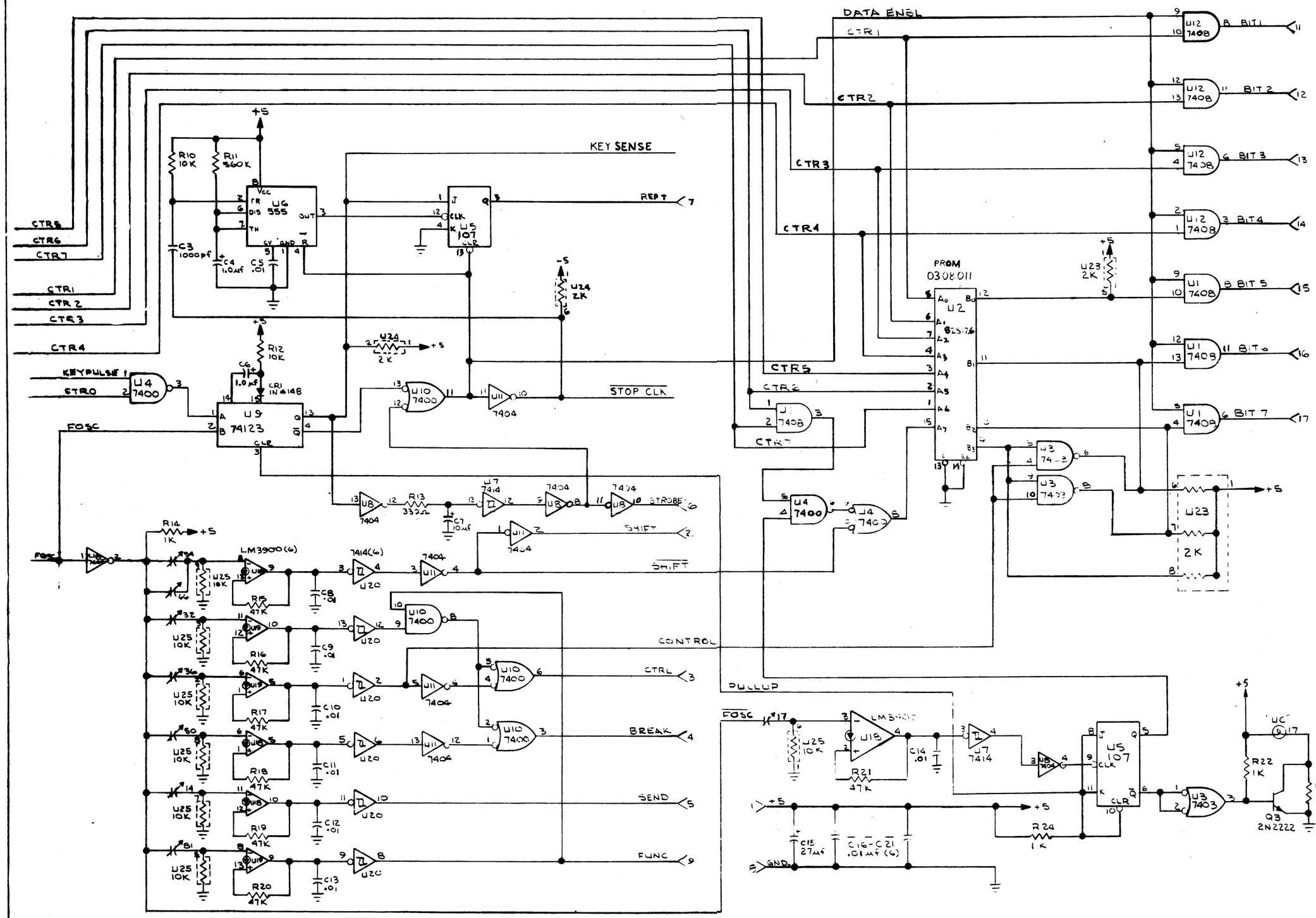

NOV 8 1976

USED ON

Maxi - Switch Co. MINNEAPOL S, MINN. 55433

NAME	
MATERIAL	
FINISH	SCALE NONE
DRAWN BY: RADIL	DATE JULY 8, 1976
APPR. BY:	DATE 11-1-76
SHEET 2 OF 2	PART NO. 262033 ISSUE 1

TOLERANCE UNLESS OTHERWISE SPECIFIED
DECIMAL DIMENSIONS
2 PLACES ± .010
3 PLACES ± .005
FRACTIONAL DIMENSIONS ± .015